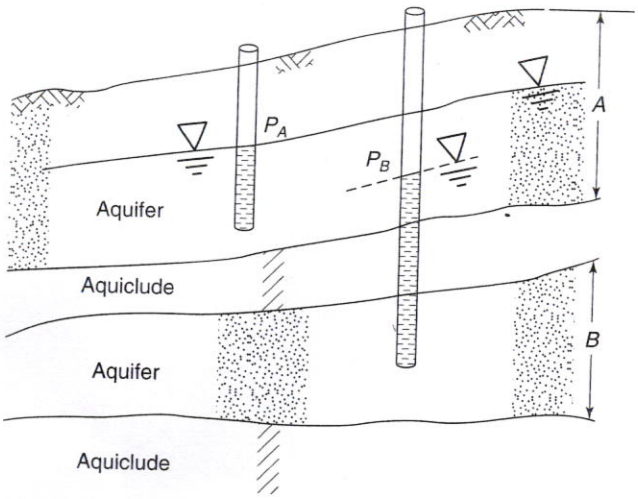

FIGURE 7.14 Examples of unconfined flow in aquifer A and confined flow in aquifer B.

Pumping from aquifers can be either unconfined or confined, depending on the geology. If a well penetrates only layer A in Fig. 7.14, flow toward the well is unconfined. On the other hand, if the well penetrates into the aquifer of layer B, seepage to the well is confined. Seepage toward wells is described in Sec. 7.8. When water seeps through earth dams and levees, as shown in Fig. 7.13(a), flow is definitely unconfined, because there is a free surface at atmospheric pressure. As explained in Sec. 7.9, the primary design problem is to establish the shape of the top line of seepage.

Different kinds of heads and head losses were described in Sec. 7.5, and it might be a good idea to review that material before proceeding further in this section.

Figure 7.15 shows how the total head $(h_p + z)$ might be determined from the positions and elevations of the water levels in the standpipes. Also shown in this figure is how energy or head is lost in flowing under a dam. Note how the water levels in each successive piezometer decrease as water flows from the heel to the toe of the dam. Example 7.15 explains in detail how head computations are made.

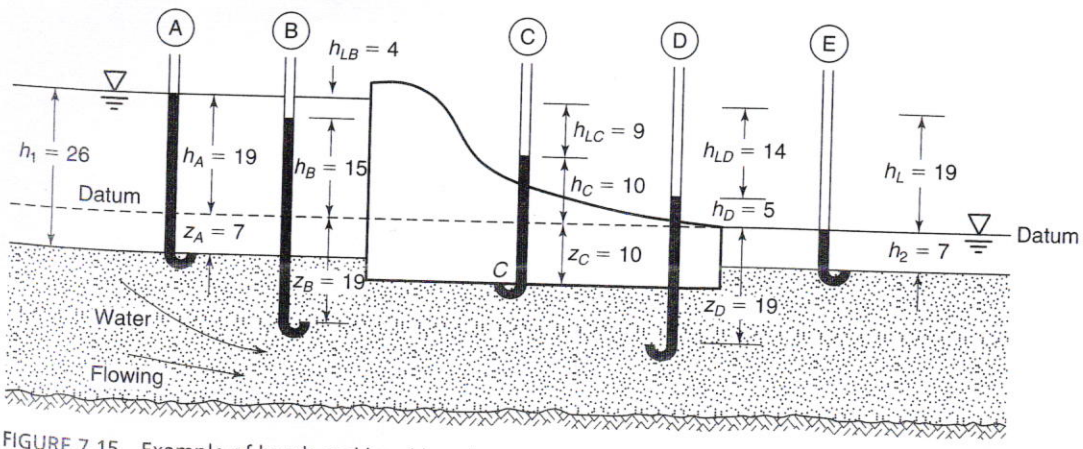

FIGURE 7.15 Example of heads and head loss due to seepage under a dam. All dimensions in metres.

Example 7.14

Given:

The dam with piezometers shown in Fig. 7.14. The total head loss is 19 m (h_L).

Required:

a. Calculate the pressure heads h_p and the total heads h for piezometers A through E.

b. Determine the uplift pressure acting on the base of the dam at point C.

Solution:

a. Pressure and total heads.

Piezometer A: The pressure head is the length of the column of water in the standpipe, or

$$h_P = h_A + z_A = h_1 = 19 + 7 = 26 \text{ m}$$

Note that this dimension is also numerically equal to

$$h_L + h_2 = 19 + 7 = 26 \text{ m}$$

The total head is

$$h = (h_P + z) = 26 - 7 = 19 \text{ m}$$

which is the height of rise above the datum.

Piezometer B:

$$h_P = h_B + z_B = 15 + 19 = 34 \text{ m}$$
$$h = (h_P + z) = 34 - 19 = 15 \text{ m}$$

Note that h is also numerically the same as

$$h_L - h_{LB} \quad \text{or} \quad h = 19 - 4 = 15 \text{ m}$$

Piezometer C:

$$h_p = h_C + z_C = 10 + 10 = 20 \text{ m}$$

(We will use this pressure head to compute the uplift pressure at point C, below.)

$$h = (h_p + z) = 20 - 10 = 10 \text{ m}$$

(Check: $h = h_L - h_{LC} = 19 - 9 = 10$ m.)

Piezometer D:

$$h_P = h_D + z_D = 5 + 19 = 24 \text{ m}$$
$$h = h_D + z_D - z_D = 5 \text{ m}$$

(Check: $h = h_L - h_{LC} = 19 - 14 = 5$ m.)

Piezometer E:

$$h_P = h_2 = 7 \text{ m}$$
$$h = h_P - z_E = 7 - 7 = 0$$
$$h_L = 19 \text{ m}$$

Note that at the tailwater all of the head has been lost. Thus the total head at this point is zero.

b. Uplift pressure at point C:

$$p_C = h_p \rho_w g = (h_C + z_C)\rho_w g = (h_L - h_{LC} + z_C)\rho_w g$$
$$= 20 \text{ m } (1000 \text{ kg/m}^3)(9.81 \text{ m/s}^2) = 196 \text{ kPa}$$

7.7.1 Flow Nets

We could represent the flow of water through the foundation under the dam in Fig. 7.15 by *flow lines*, which would represent an average flow path of a particle of water from the upstream reservoir down to the tail water. Similarly, we could represent the energy of flow by lines of equal potential, called, naturally, *equipotential lines*, or contours of constant total head. Along any equipotential line, the energy available to cause flow is the same; conversely, the energy lost by the water in getting to that line is the same all along the line. The network of flow lines and equipotential lines is called a *flow net*, a concept that illustrates graphically how the head or energy is lost as water flows through a porous medium, as shown in Fig. 7.16.

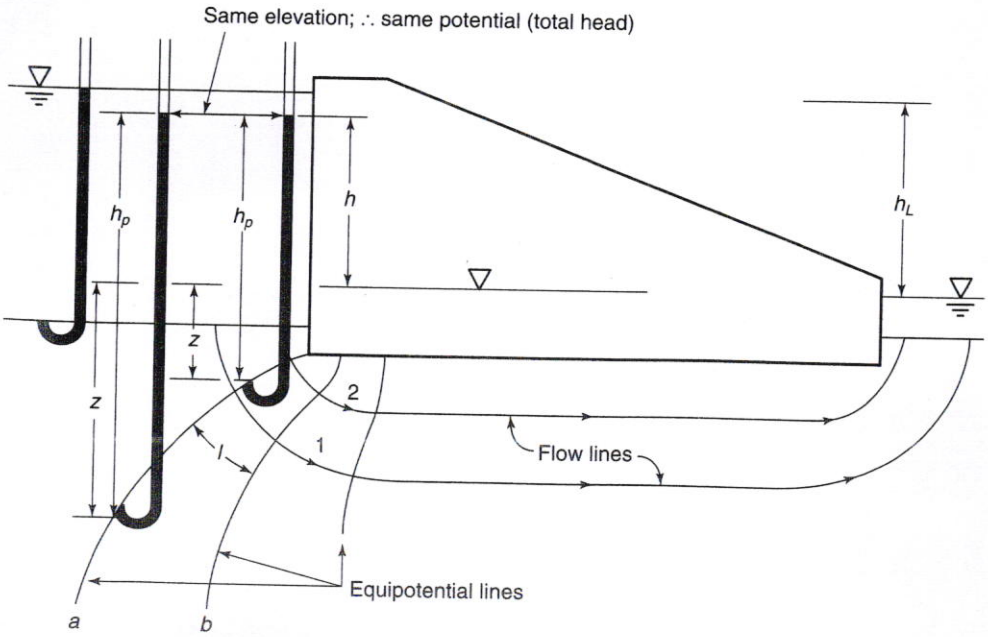

FIGURE 7.16 Equipotential and flow lines (only a few shown).

Name Surname: **Number:** **Group:**

4) A flow net is shown for a dam in the below figure. The permeability of soil (k) = 1.96×10^{-3} cm/sn.
   a) Compute the flow rate q.
   b) Compute the water pressures at point A, B, and C.

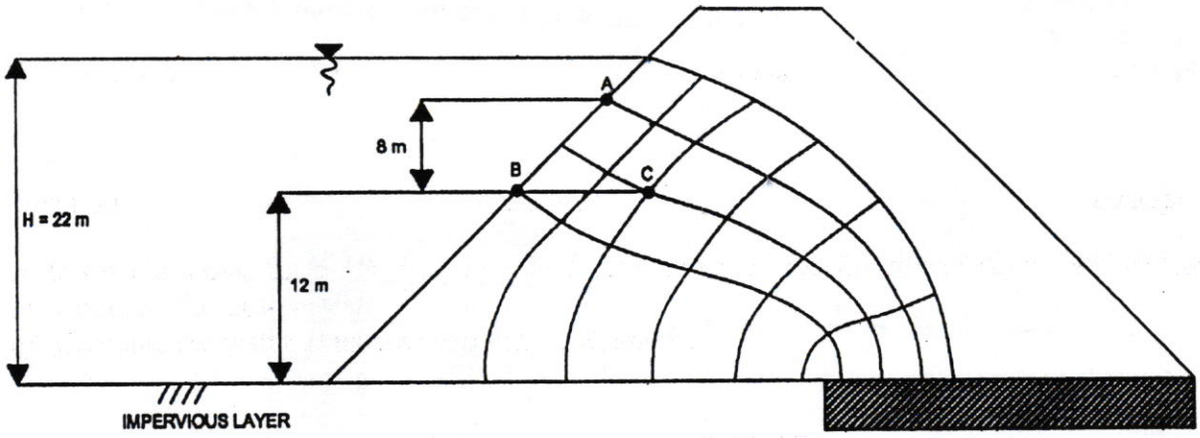

(a) $q = k \cdot H \cdot \left(\frac{N_f}{N_d}\right) = 1.96 \times 10^{-3} \times 10^{-2} \times 22 \times \left(\frac{4}{6}\right)$

$= 2.875 \times 10^{-4}\ m^3/s/m$

(b) $\Delta h^* = \frac{\Delta H}{N_d} = \frac{22}{6} = 3.66\ m$

$h_A = \frac{u_A}{\gamma_w} + z_A \rightarrow$ $h_A = 22^m$, $z_A = 20^m$ $\quad \frac{u_A}{\gamma_w} = 2^m \quad u_A = 2 \times 9.8 = 19.6$ kPa

$h_B = 22 = \frac{u_B}{\gamma_w} + 12 \rightarrow u_B = 10 \times 9.8 = 98$ kPa

$h_C = 22 - (2) \times (3.66) \cong 14.7 = \frac{u_C}{\gamma_w} + 12$

$u_C = 2.7 \times 9.8 = 26.45$ kPa

Name Surname: Number: Group:

5) a) A soil profile and a footing are shown in the following figure. If an ultimate settlement of 0.02m is allowed underneath the center of the footing due to primary consolidation of the clay layer, calculate the column load (Q) that will be carried by the footing.

b) Oedometer test on a 25mm thick clay specimen recovered from the same clay layer showed that 50% consolidation took place in 10 minutes. How long will it take for a settlement of 0.02 m to take place in the field?

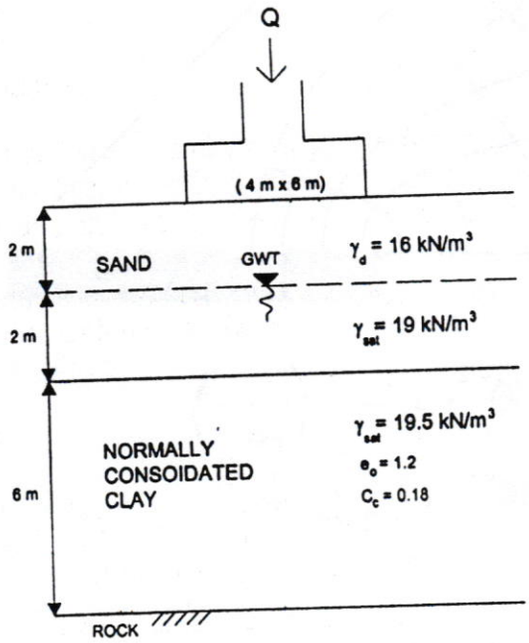

U (%)	T
10	0.008
20	0.031
30	0.071
40	0.126
50	0.197
60	0.287
70	0.408
80	0.567
90	0.848

(a) $\sigma_o = 2\times 16 + 2\times(19-9.8) + 3\times(19.5-9.8) = 79.5$ kPa

$$S_c = H \times \frac{C_c}{1+e_o} \times \log\left(\frac{\sigma_o' + \Delta\sigma}{\sigma_o'}\right)$$

$$0.02 = 6 \times \frac{0.18}{1+1.20} \times \log\left(\frac{79.5+\Delta\sigma}{79.5}\right)$$

$$79.5 + \Delta\sigma = (1.098) \times 79.5$$

$$\Delta\sigma \cong 7.8 \text{ kPa}$$

Basitleştirilmiş yöntem

$$\frac{Q}{(4+7)(6+7)} = 7.8 \rightarrow Q \cong 1115 \text{ kN}$$

(b) $0.197 = \dfrac{C_v \times 10}{\left(\frac{2.5}{2}\right)^2} \Rightarrow C_v = 0.03$ cm/dk

$$0.848 = \frac{0.03 \times t}{(600)^2} \cong 10\,176\,000 \text{ dk}$$

$$\cong 19 \text{ yıl}$$

Time75 minutes. Good Luck...