Thermodynamics: An Engineering Approach, 5th Edition
Yunus A. Cengel, Michael A. Boles
McGraw-Hill, 2008

Chapter 9
GAS POWER CYCLES

Prof. Dr. Ali PINARBAŞI
Yildiz Technical University
Mechanical Engineering Department
Yildiz, ISTANBUL

Objectives

- Evaluate the performance of gas power cycles for which the working fluid remains a gas throughout the entire cycle.
- Develop simplifying assumptions applicable to gas power cycles.
- Review the operation of reciprocating engines.
- Analyze both closed and open gas power cycles.
- Solve problems based on the Otto, Diesel, Stirling, and Ericsson cycles.
- Solve problems based on the Brayton cycle; the Brayton cycle with regeneration; and the Brayton cycle with intercooling, reheating, and regeneration.
- Analyze jet-propulsion cycles.
- Identify simplifying assumptions for second-law analysis of gas power cycles.
- Perform second-law analysis of gas power cycles.

BASIC CONSIDERATIONS IN THE ANALYSIS OF POWER CYCLES

Most power-producing devices operate on cycles.

Ideal cycle: A cycle that resembles the actual cycle closely but is made up totally of internally reversible processes is called on.

Reversible cycles such as **Carnot cycle** have the highest thermal efficiency of all heat engines operating between the same temperature levels. Unlike ideal cycles, they are totally reversible, and unsuitable as a realistic model.

Thermal efficiency of heat engines

$$\eta_{th} = \frac{W_{net}}{Q_{in}} \quad \text{or} \quad \eta_{th} = \frac{w_{net}}{q_{in}}$$

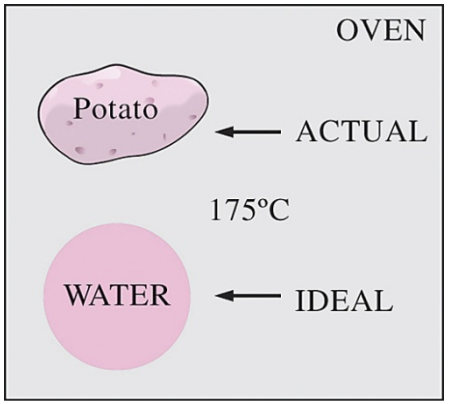

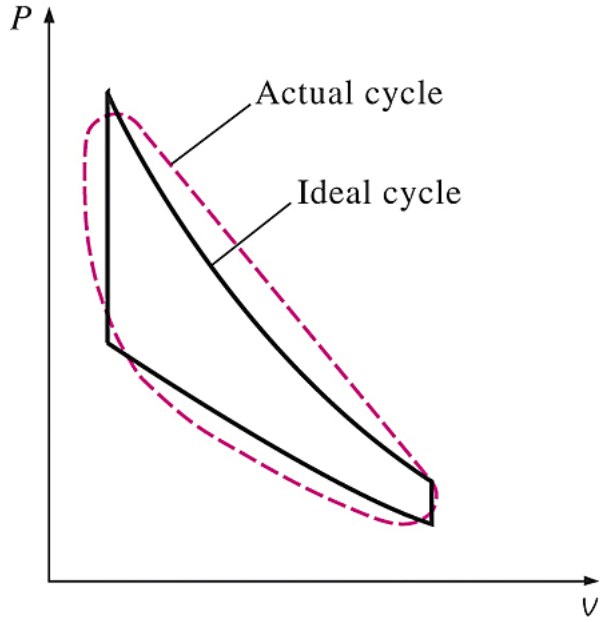

Modeling is a powerful engineering tool that provides great insight and simplicity at the expense of some loss in accuracy.

Care should be exercised in the interpretation of the results from ideal cycles.

The analysis of many complex processes can be reduced to a manageable level by utilizing some idealizations.

The idealizations and simplifications in the analysis of power cycles

1. The cycle does **not involve any *friction*.** Therefore, the working fluid does not experience any pressure drop as it flows in pipes or devices such as heat exchangers.
2. All expansion and compression processes take place in a ***quasi-equilibrium*** manner.
3. The pipes connecting the various components of a system are **well insulated**, and *heat transfer* through them is negligible.

On a *T-s* diagram, the ratio of the area enclosed by the cyclic curve to the area under the heat-addition process curve represents the thermal efficiency of the cycle. Any modification that increases the ratio of these two areas will also increase the thermal efficiency of the cycle.

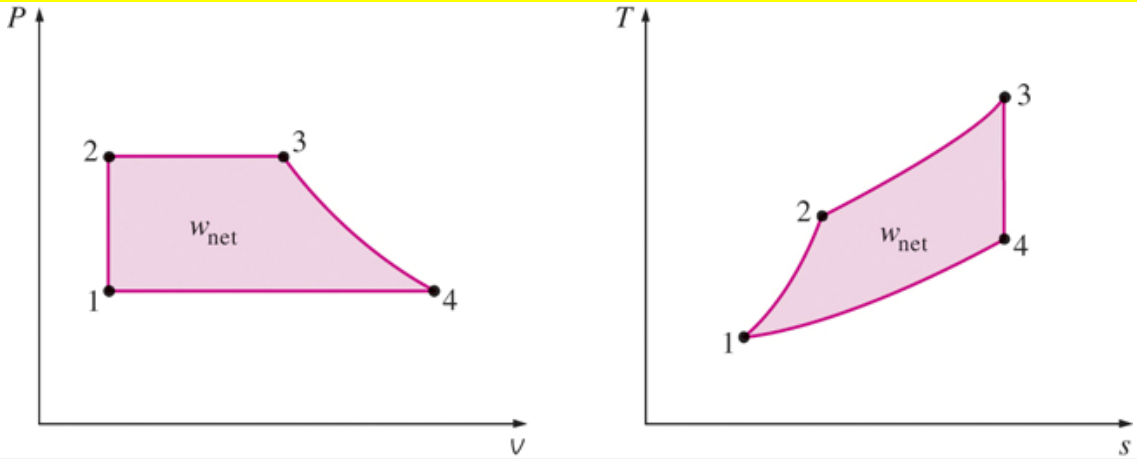

P-v and *T-s* diagrams, the area enclosed by the process curve represents the net work of the cycle.

THE CARNOT CYCLE AND ITS VALUE IN

The Carnot cycle is composed of four totally reversible processes: isothermal heat addition, isentropic expansion, isothermal heat rejection, and isentropic compression.

For both ideal and actual cycles: Thermal efficiency increases with an increase in the average temperature at which heat is supplied to the system or with a decrease in the average temperature at which heat is rejected from the system.

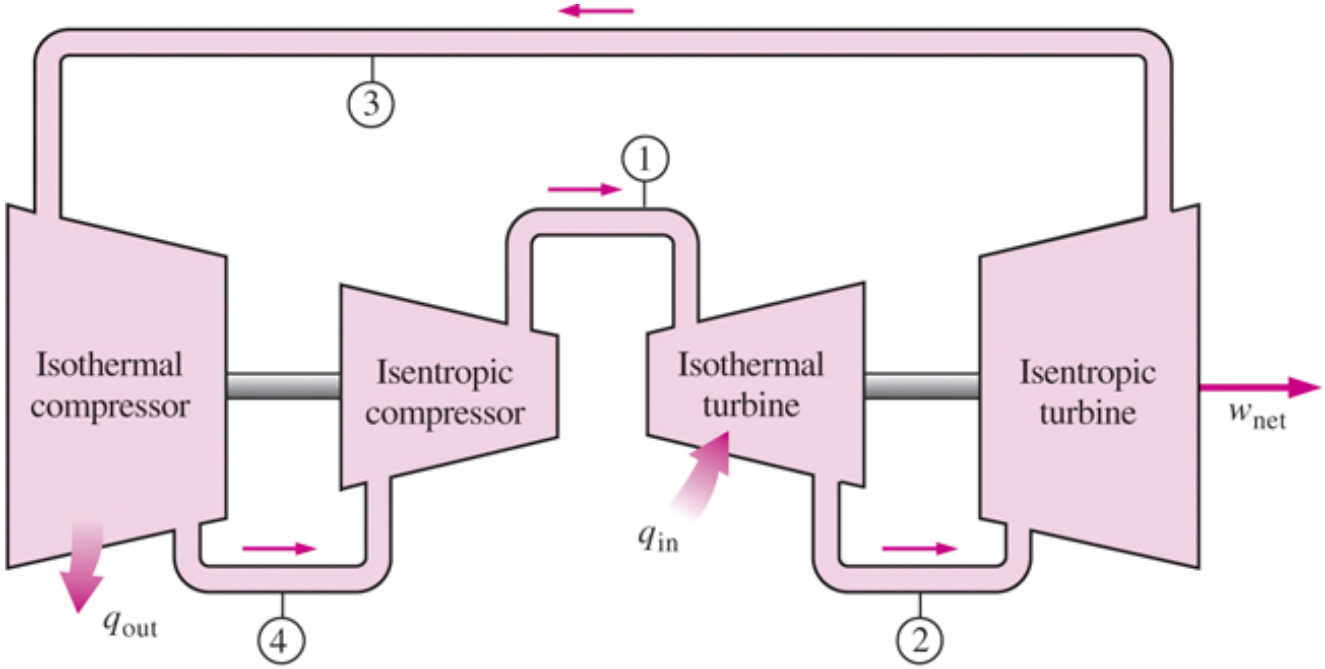

A steady-flow Carnot engine.

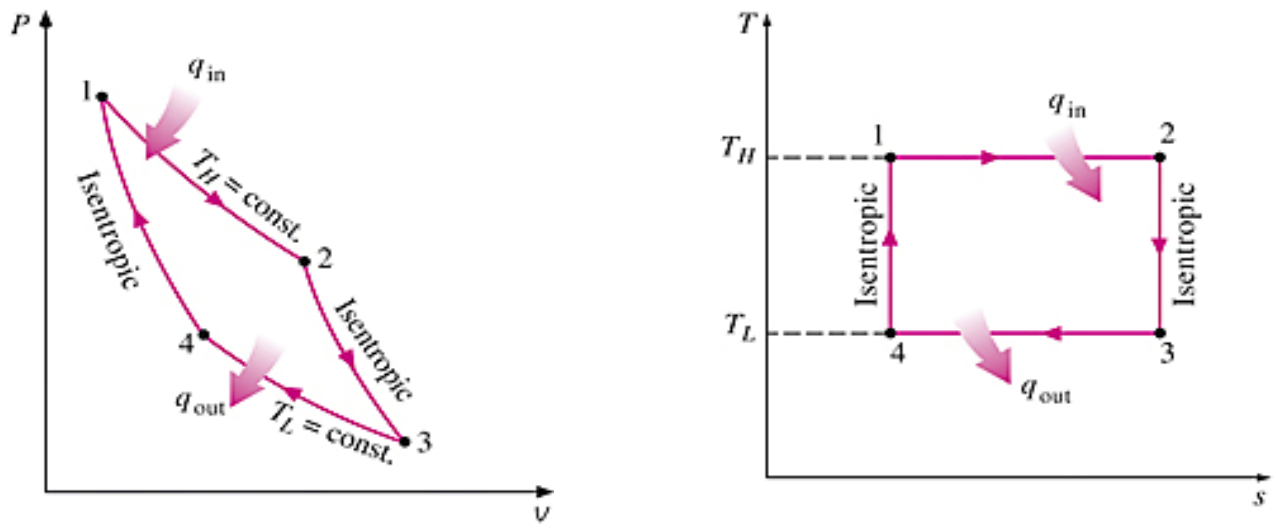

P-v and *T-s* diagrams of a Carnot cycle.

$$\eta_{\text{th,Carnot}} = 1 - \frac{T_L}{T_H}$$

EXAMPLE 9–1

Show that the thermal efficiency of a Carnot cycle operating between the temperature limits of T_H and T_L is solely a function of these two temperatures and is given by

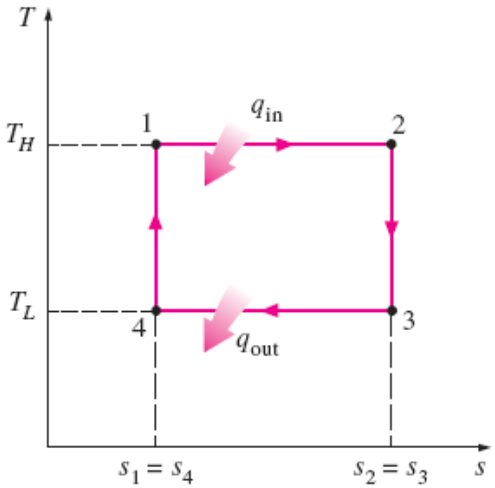

$$\eta_{\text{th, Carnot}} = 1 - \frac{T_L}{T_H}$$

Solution It is to be shown that the efficiency of a Carnot cycle depends on the source and sink temperatures alone.

Analysis All four processes that comprise the Carnot cycle are reversible, and thus the area under each process curve represents the heat transfer for that process. Heat is transferred to the system during process 1-2 and rejected during process 3-4. Therefore, the amount of heat input and heat output for the cycle can be expressed as

$$q_{in} = T_H(s_2 - s_1) \quad \text{and} \quad q_{out} = T_L(s_3 - s_4) = T_L(s_2 - s_1)$$

$$\eta_{th} = \frac{w_{net}}{q_{in}} = 1 - \frac{q_{out}}{q_{in}} = 1 - \frac{T_L(s_2 - s_1)}{T_H(s_2 - s_1)} = 1 - \frac{T_L}{T_H}$$

Discussion Notice that the thermal efficiency of a Carnot cycle is independent of the type of the working fluid used (an ideal gas, steam, etc.) or whether the cycle is executed in a closed or steady-flow system.

AIR-STANDARD ASSUMPTIONS

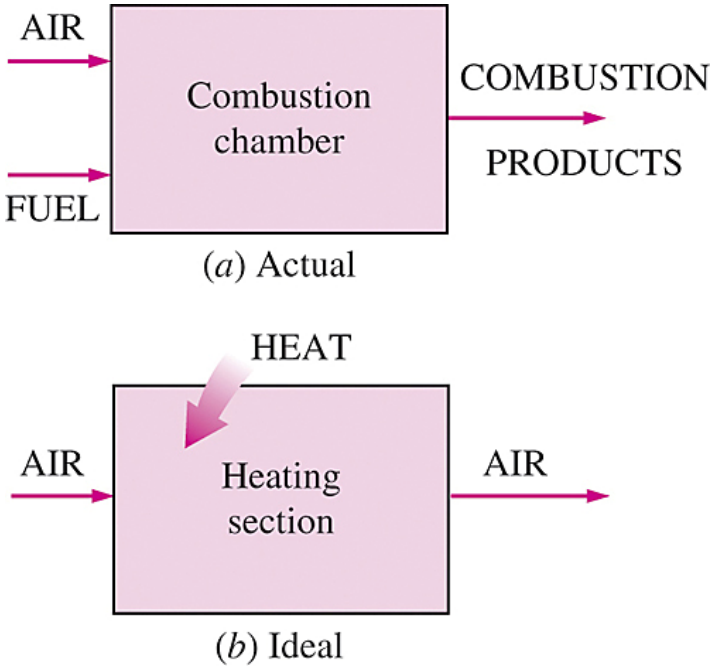

The combustion process is replaced by a heat-addition process in ideal cycles.

Air-standard assumptions:

1. The working fluid is air, which continuously circulates in a closed loop and always behaves as an ideal gas.
2. All the processes that make up the cycle are internally reversible.
3. The combustion process is replaced by a heat-addition process from an external source.
4. The exhaust process is replaced by a heat-rejection process that restores the working fluid to its initial state.

Cold-air-standard assumptions: When the working fluid is considered to be air with constant specific heats at room temperature (25°C).

Air-standard cycle: A cycle for which the air-standard assumptions are applicable.

AN OVERVIEW OF RECIPROCATING ENGINES

Compression ratio

$$r = \frac{V_{max}}{V_{min}} = \frac{V_{BDC}}{V_{TDC}}$$

- Spark-ignition (SI) engines
- Compression-ignition (CI) engines

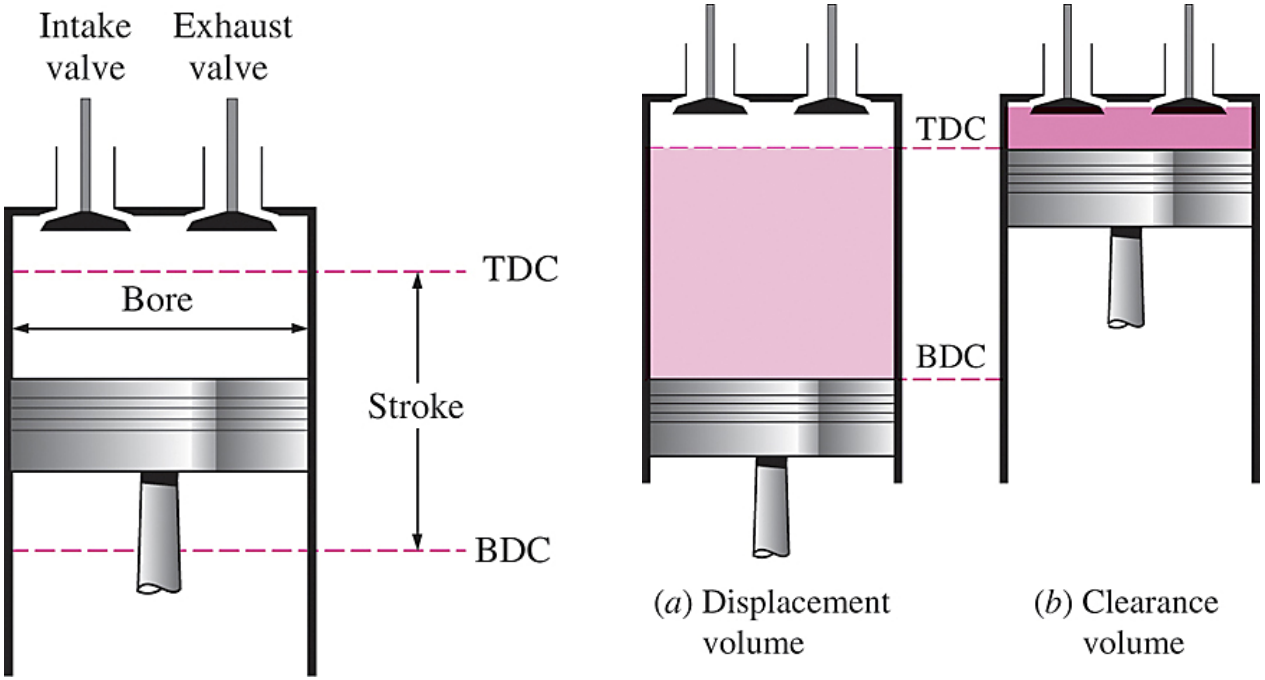

Nomenclature for reciprocating engines.

Mean effective pressure

$$\text{MEP} = \frac{W_{net}}{V_{max} - V_{min}} = \frac{w_{net}}{v_{max} - v_{min}} \quad \text{(kPa)}$$

The mean effective pressure can be used as a parameter to compare the performances of reciprocating engines of equal size. The engine with a larger value of MEP will deliver more net work per cycle and thus will perform better.

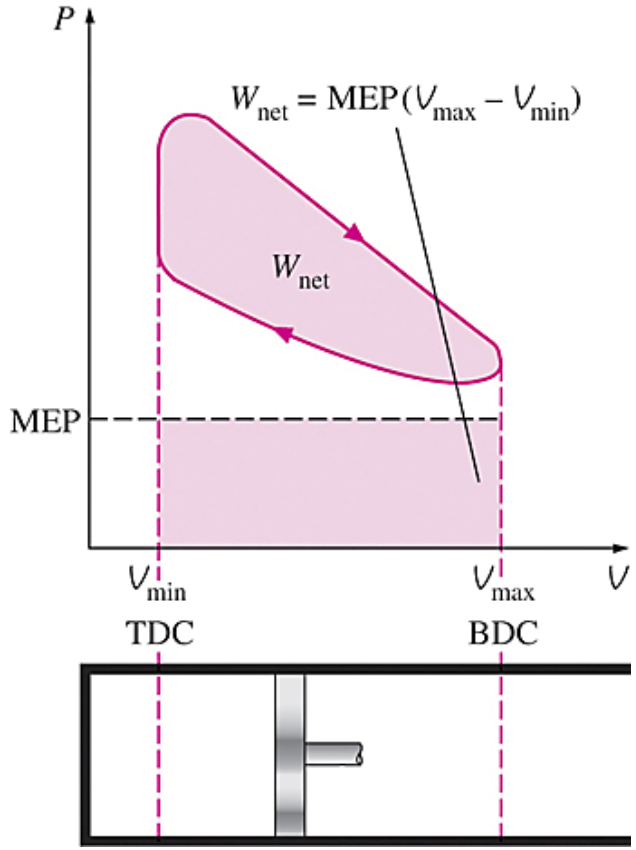

$$W_{net} = \text{MEP} \times \text{Piston area} \times \text{Stroke}$$
$$= \text{MEP} \times \text{Displacement volume}$$

The net work output of a cycle is equivalent to the product of the mean effective pressure and the displacement volume.

Motor Animasyonu

otto cycle: the ideal cycle for spark-ignition engines

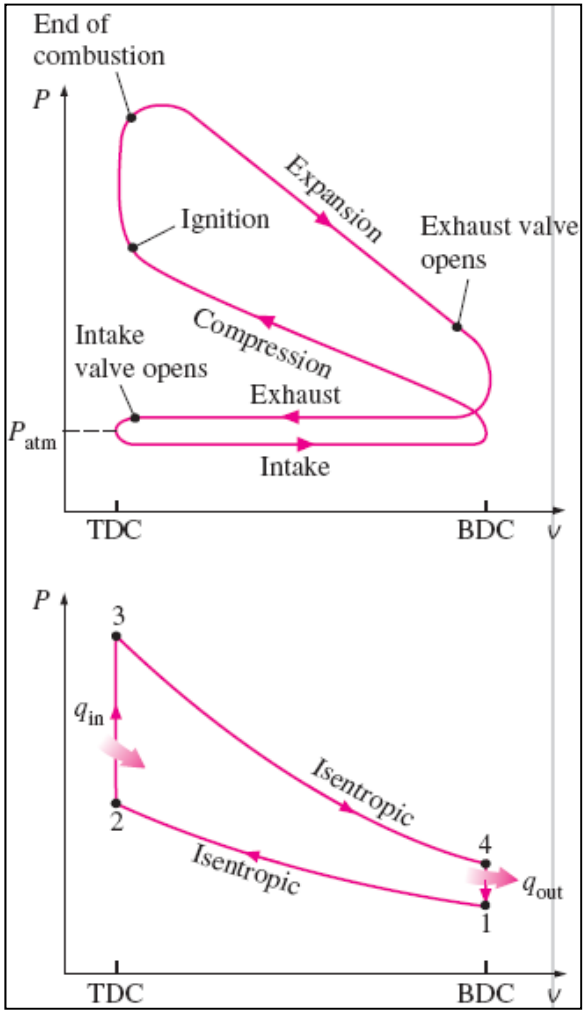

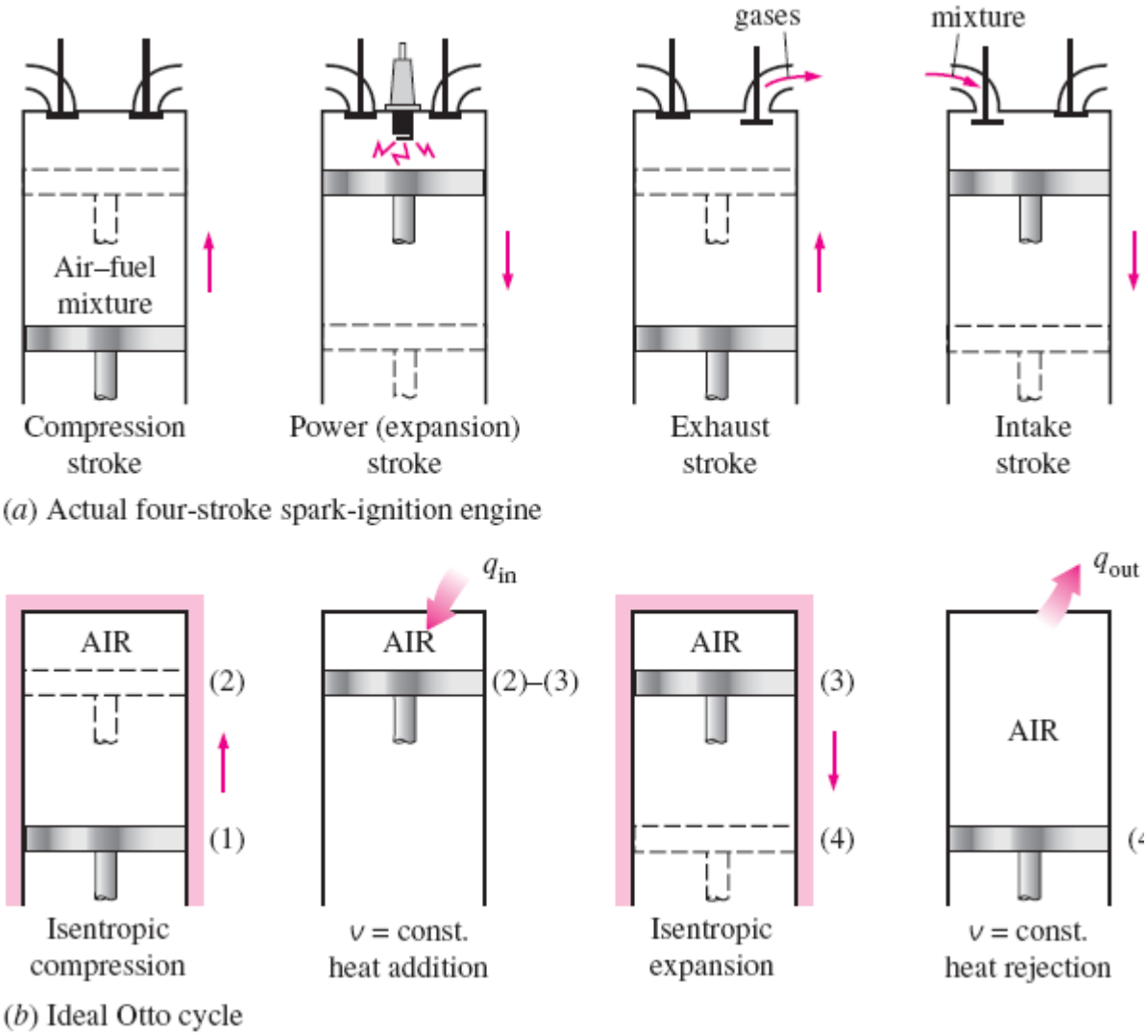

Actual and ideal cycles in spark-ignition engines and their *P-v* diagrams.

Four-stroke cycle

1 cycle = 4 stroke = 2 revolution

Two-stroke cycle

1 cycle = 2 stroke = 1 revolution

1-2 Isentropic compression

2-3 Constant-volume heat addition

3-4 Isentropic expansion

4-1 Constant-volume heat rejection

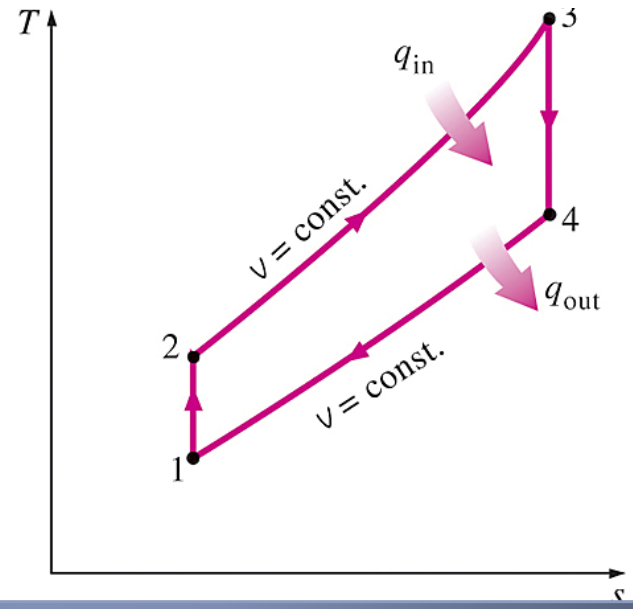

T-s diagram of the ideal Otto cycle.

The two-stroke engines are generally less efficient than their four-stroke counterparts but they are relatively simple and inexpensive, and they have high power-to-weight and power-to-volume ratios.

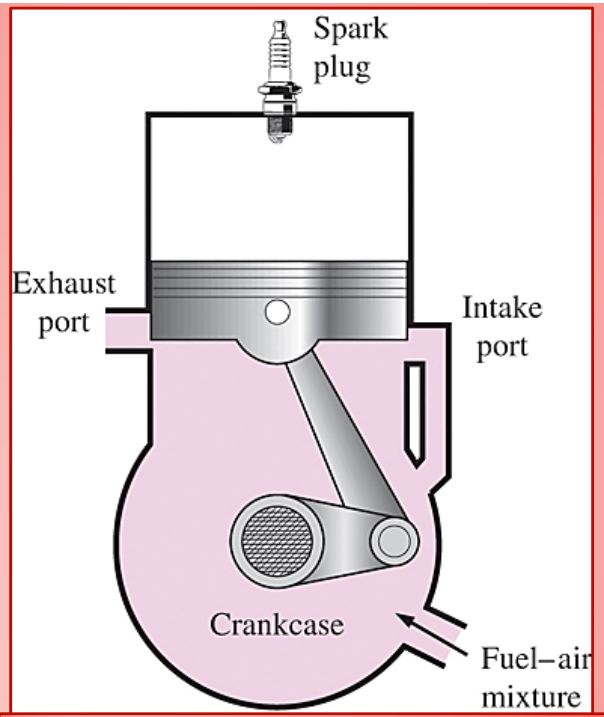

Schematic of a two-stroke reciprocating engine.

4- Stroke Cycles

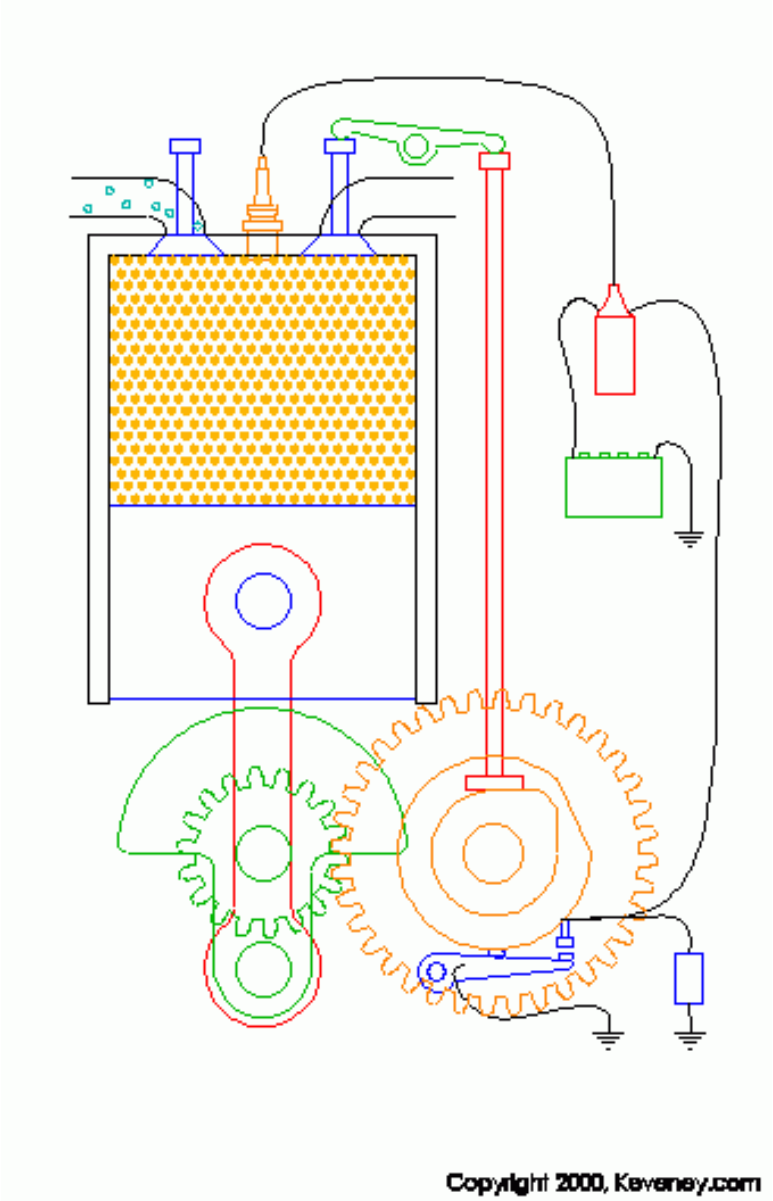

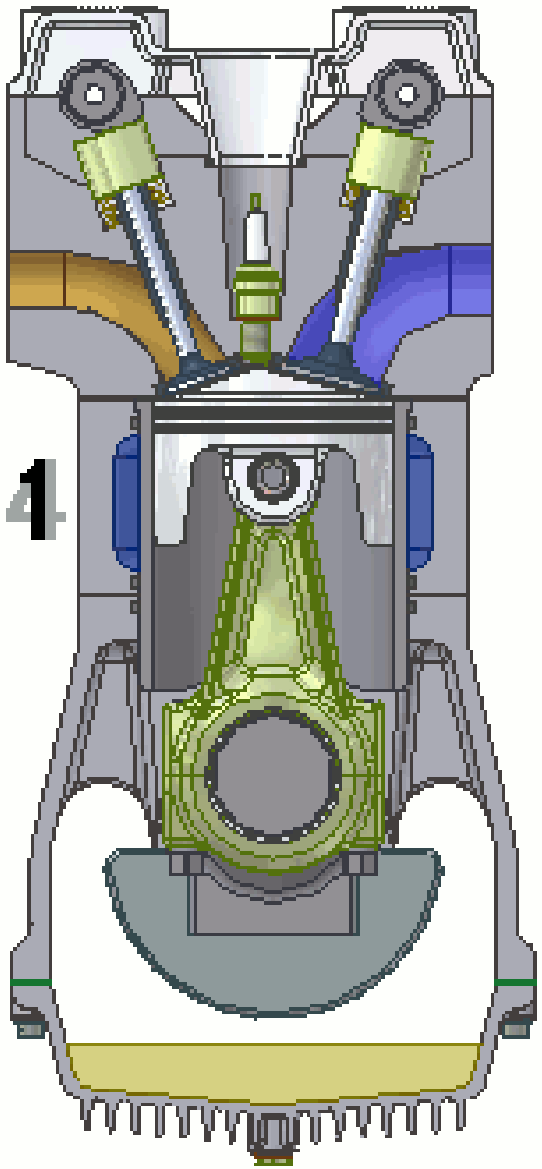

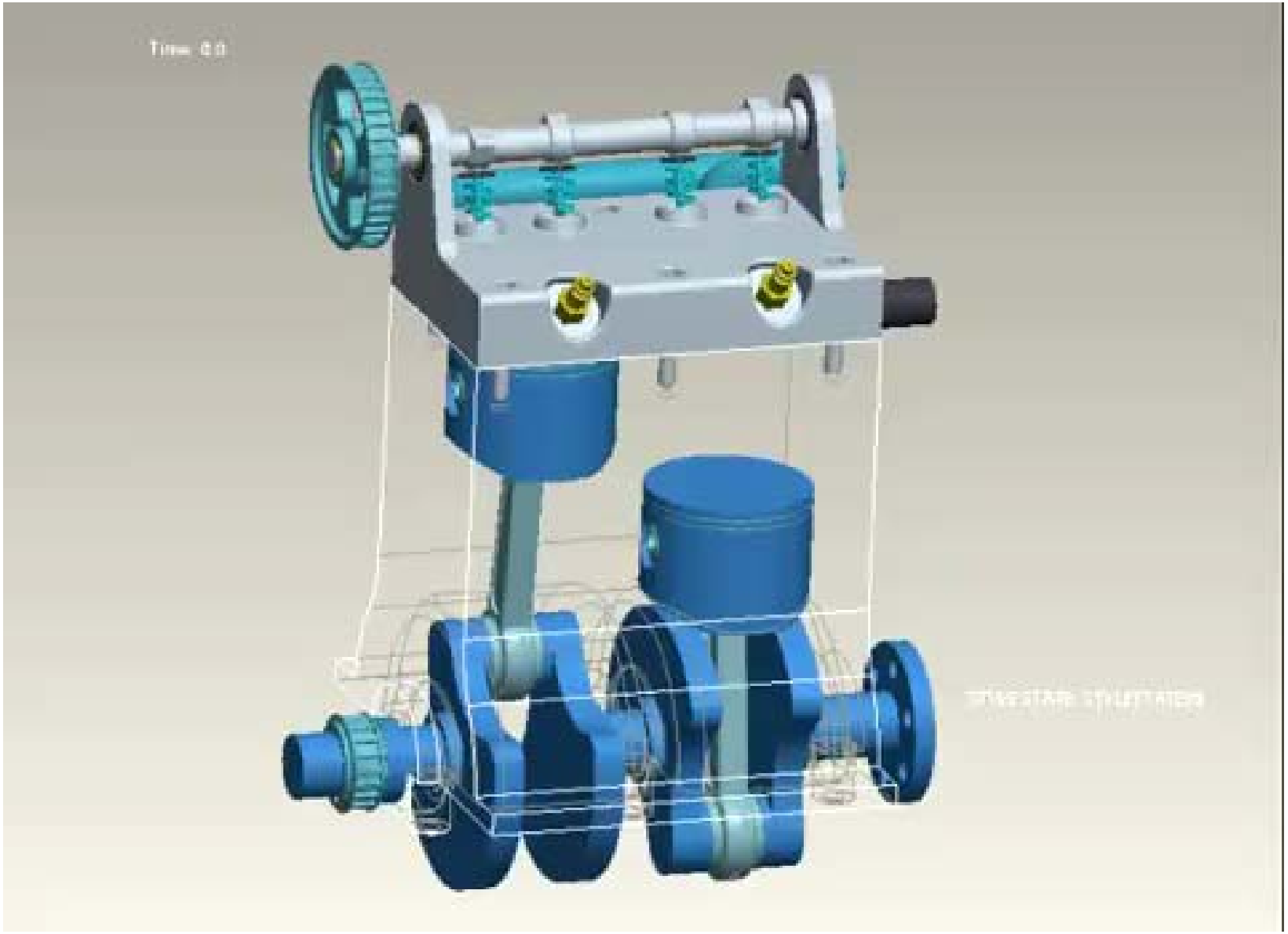

2- Stroke Cycles

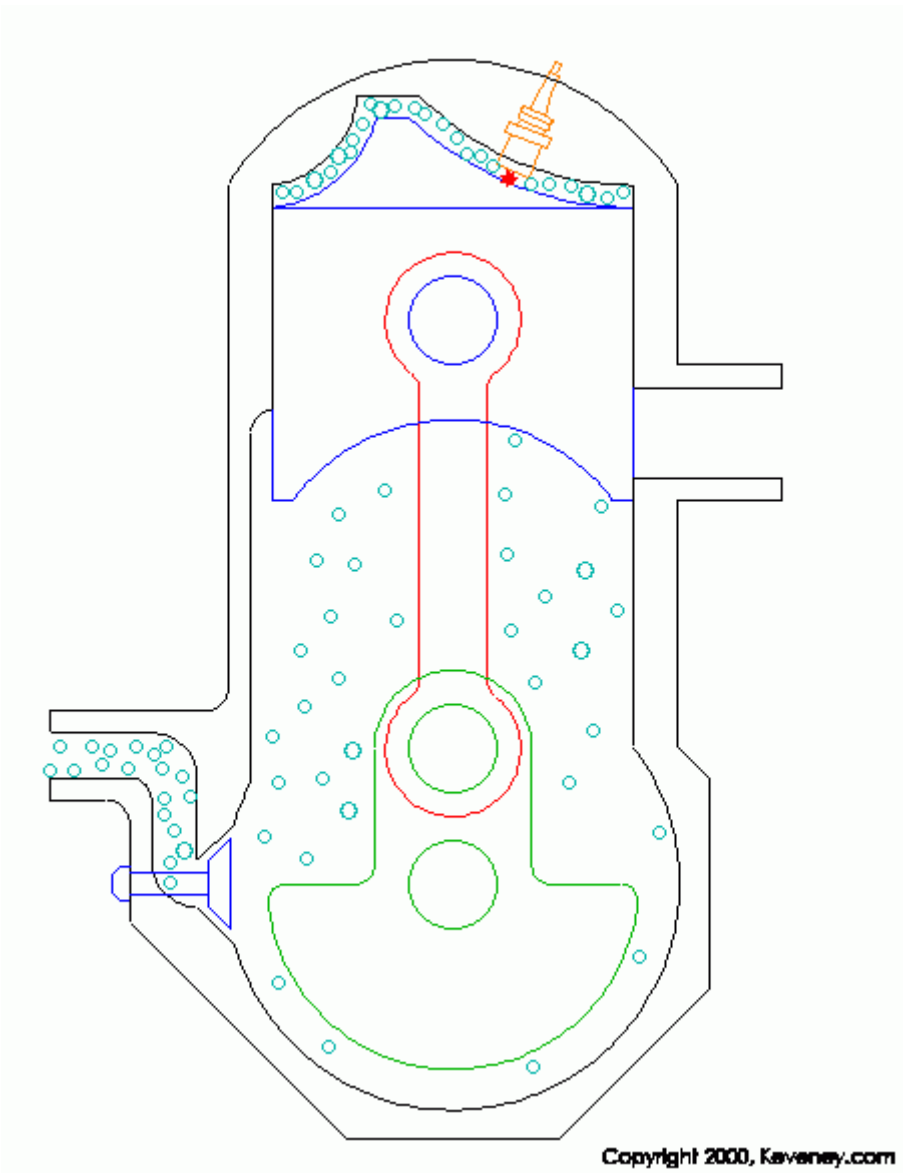

2 Stroke Cycles

$$(q_{in} - q_{out}) + (w_{in} - w_{out}) = \Delta u \qquad \text{(kJ/kg)}$$

$$q_{in} = u_3 - u_2 = c_v(T_3 - T_2)$$

$$q_{out} = u_4 - u_1 = c_v(T_4 - T_1)$$

$$\eta_{th,\,Otto} = \frac{w_{net}}{q_{in}} = 1 - \frac{q_{out}}{q_{in}} = 1 - \frac{T_4 - T_1}{T_3 - T_2} = 1 - \frac{T_1(T_4/T_1 - 1)}{T_2(T_3/T_2 - 1)}$$

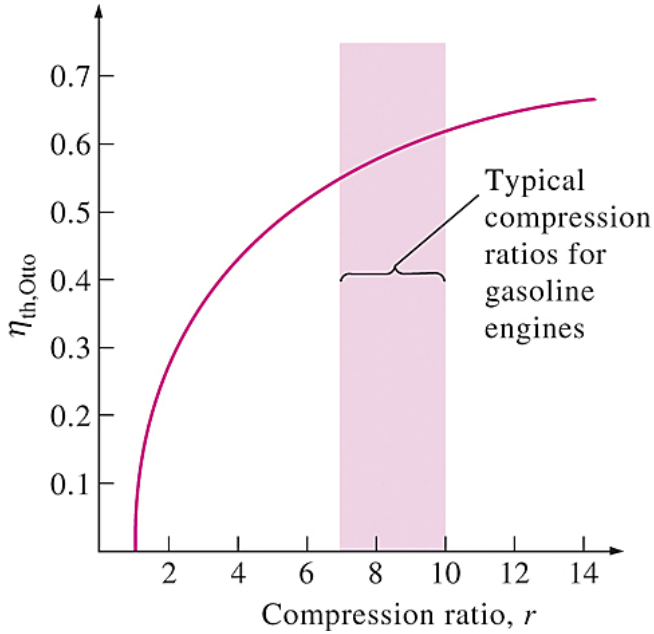

$$\frac{T_1}{T_2} = \left(\frac{v_2}{v_1}\right)^{k-1} = \left(\frac{v_3}{v_4}\right)^{k-1} = \frac{T_4}{T_3}$$

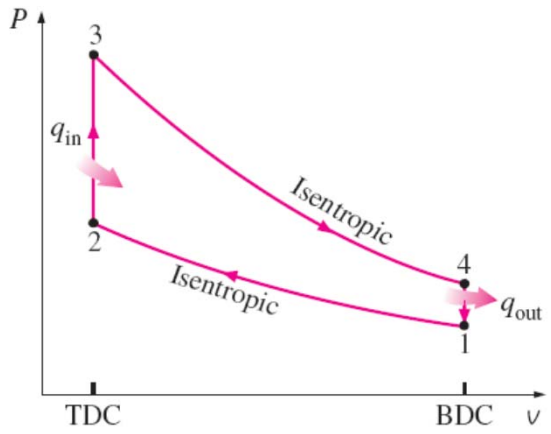

The thermal efficiency of the Otto cycle increases with the specific heat ratio *k* of the working fluid.

$$\eta_{\text{th, Otto}} = 1 - \frac{1}{r^{k-1}}$$

In SI engines, the compression ratio is limited by auto ignition or engine knock.

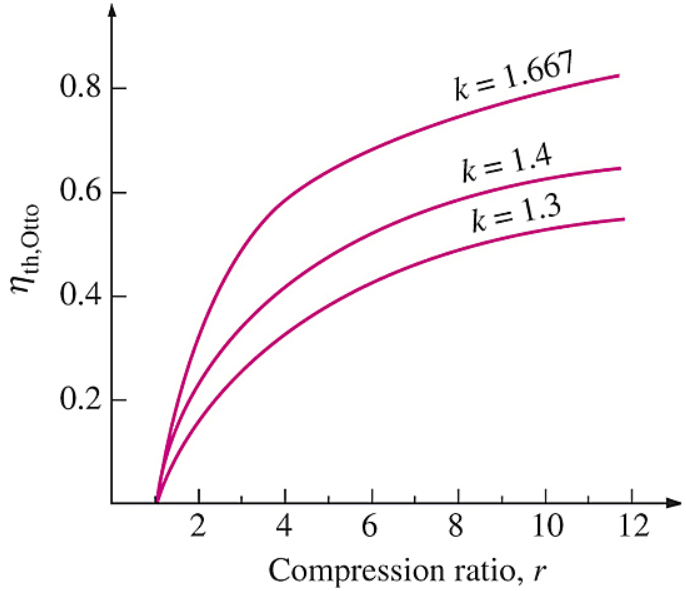

Thermal efficiency of the ideal Otto cycle as a function of compression ratio (k = 1.4).

The working fluid in actual engines contains larger molecules such as carbon dioxide and the specific heat ratio decreases with temperature, which is one of the reasons that the actual cycles have lower thermal efficiencies than the ideal Otto cycle. The thermal efficiencies of actual spark-ignition engines range from **about 25 to 30 %.**

EXAMPLE 9–2

An ideal Otto cycle has a compression ratio of 8. At the beginning of the compression process, air is at 100 kPa and 17°C, and 800 kJ/kg of heat is transferred to air during the constant-volume heat-addition process. Accounting for the variation of specific heats of air with temperature, determine (*a*) the maximum temperature and pressure that occur during the cycle,(*b*) the net work output, (*c*) the thermal efficiency, and (*d*) the mean effective pressure for the cycle.

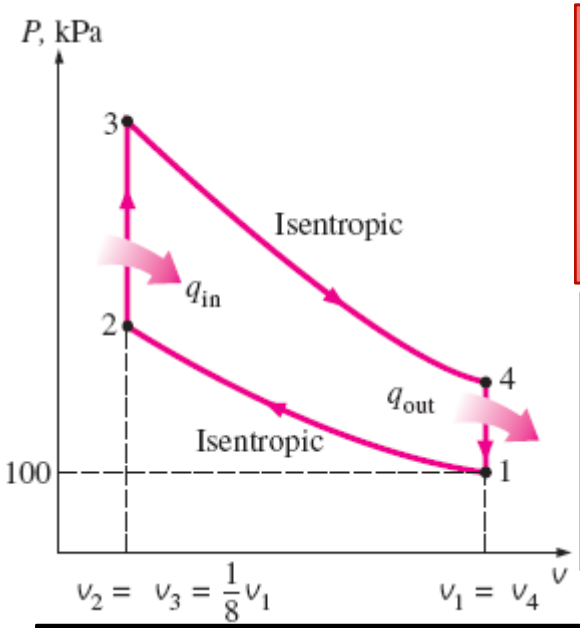

Solution An ideal Otto cycle with specified compression ratio and heat input is considered.

Assumptions **1** The air-standard assumptions are applicable. **2** Kinetic and potential energy changes are negligible. **3** The variation of specific heats with temperature is to be accounted for.

(*a*) The maximum temperature and pressure in an Otto cycle occur at the end of the constant-volume heat-addition process (state 3). To determine the temperature and pressure of air at the end of the isentropic compression process (state 2), using data from Table A–17:

The properties P_r (relative pressure) and v_r (relative specific volume are dimensionless quantities used in the analysis of isentropic processes, should not be confused with the properties pressure and specific volume.

$$T_1 = 290\ \text{K} \rightarrow u_1 = 206.91\ \text{kJ/kg}$$

$$v_{r1} = 676.1$$

Process 1-2 (isentropic compression of an ideal gas):

$$\frac{v_{r2}}{v_{r1}} = \frac{v_2}{v_1} = \frac{1}{r} \rightarrow v_{r2} = \frac{v_{r1}}{r} = \frac{676.1}{8} = 84.51 \rightarrow T_2 = 652.4 \text{ K}$$

$$u_2 = 475.11 \text{ kJ/kg}$$

$$\frac{P_2 v_2}{T_2} = \frac{P_1 v_1}{T_1} \rightarrow P_2 = P_1\left(\frac{T_2}{T_1}\right)\left(\frac{v_1}{v_2}\right)$$

$$= (100 \text{ kPa})\left(\frac{652.4 \text{ K}}{290 \text{ K}}\right)(8) = 1799.7 \text{ kPa}$$

Process 2-3 (constant-volume heat addition):

$$q_{in} = u_3 - u_2$$

$$800 \text{ kJ/kg} = u_3 - 475.11 \text{ kJ/kg}$$

$$u_3 = 1275.11 \text{ kJ/kg} \rightarrow T_3 = \mathbf{1575.1 \text{ K}}$$

$$v_{r3} = 6.108$$

$$\frac{P_3 v_3}{T_3} = \frac{P_2 v_2}{T_2} \rightarrow P_3 = P_2\left(\frac{T_3}{T_2}\right)\left(\frac{v_2}{v_3}\right)$$

$$= (1.7997 \text{ MPa})\left(\frac{1575.1 \text{ K}}{652.4 \text{ K}}\right)(1) = \mathbf{4.345 \text{ MPa}}$$

(*b*) The net work output for the cycle is determined either by finding the boundary (*P dV*) work involved in each process by integration and adding them or by finding the net heat transfer that is equivalent to the net work done during the cycle. We take the latter approach. However, first we need to find the internal energy of the air at state 4:

Process 3-4 (isentropic expansion of an ideal gas):

$$\frac{v_{r4}}{v_{r3}} = \frac{v_4}{v_3} = r \rightarrow v_{r4} = r v_{r3} = (8)(6.108) = 48.864 \rightarrow T_4 = 795.6 \text{ K} \qquad u_4 = 588.74 \text{ kJ/kg}$$

Process 4-1 (constant-volume heat rejection):

$$-q_{out} = u_1 - u_4 \rightarrow q_{out} = u_4 - u_1$$

$$q_{out} = 588.74 - 206.91 = 381.83 \text{ kJ/kg}$$

$$w_{net} = q_{net} = q_{in} - q_{out} = 800 - 381.83 = \mathbf{418.17 \text{ kJ/kg}}$$

(*c*) The thermal efficiency of the cycle is determined from its definition,

$$\eta_{th} = \frac{w_{net}}{q_{in}} = \frac{418.17 \text{ kJ/kg}}{800 \text{ kJ/kg}} = \mathbf{0.523 \text{ or } 52.3\%}$$

$$\eta_{th,\,Otto} = 1 - \frac{1}{r^{k-1}} = 1 - r^{1-k} = 1 - (8)^{1-1.4} = 0.565 \text{ or } 56.5\%$$

(*d*) The mean effective pressure is determined from its definition,

$$\text{MEP} = \frac{w_{\text{net}}}{v_1 - v_2} = \frac{w_{\text{net}}}{v_1 - v_1/r} = \frac{w_{\text{net}}}{v_1(1 - 1/r)}$$

$$v_1 = \frac{RT_1}{P_1} = \frac{(0.287\ \text{kPa}\cdot\text{m}^3/\text{kg}\cdot\text{K})(290\ \text{K})}{100\ \text{kPa}} = 0.832\ \text{m}^3/\text{kg}$$

$$\text{MEP} = \frac{418.17\ \text{kJ/kg}}{(0.832\ \text{m}^3/\text{kg})\left(1 - \frac{1}{8}\right)}\left(\frac{1\ \text{kPa}\cdot\text{m}^3}{1\ \text{kJ}}\right) = \mathbf{574.4\ kPa}$$

Therefore, a constant pressure of 574.4 kPa during the power stroke would produce the same net work output as the entire cycle.

DIESEL CYCLE: THE IDEAL CYCLE FOR COMPRESSION-IGNITION ENGINES

In diesel engines, only air is compressed during the compression stroke, eliminating the possibility of auto ignition (engine knock). Therefore, diesel engines can be designed to operate at much higher compression ratios than SI engines, typically between **12 and 24**.

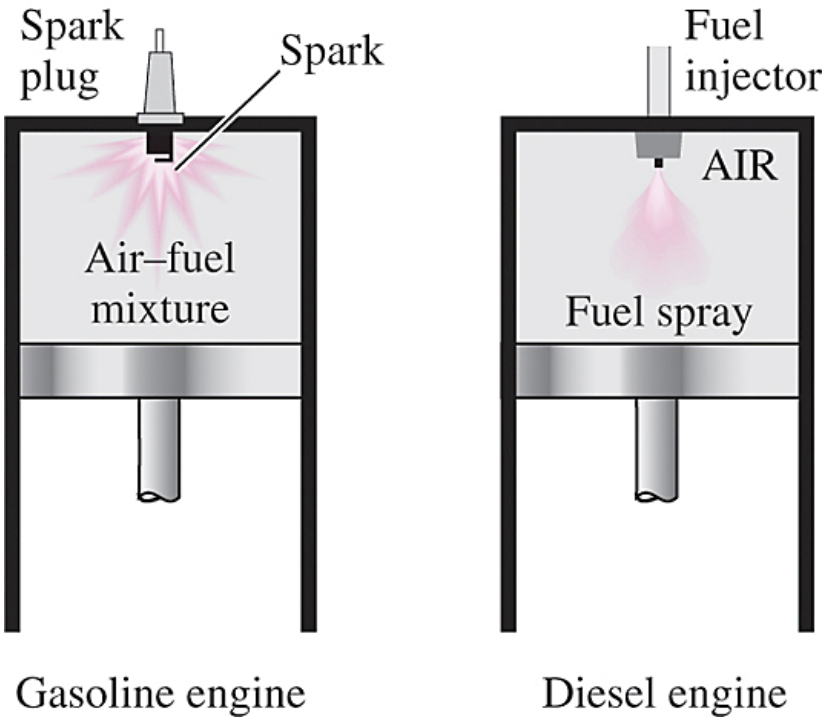

In diesel engines, the spark plug is replaced by a fuel injector, and only air is compressed during the compression process.

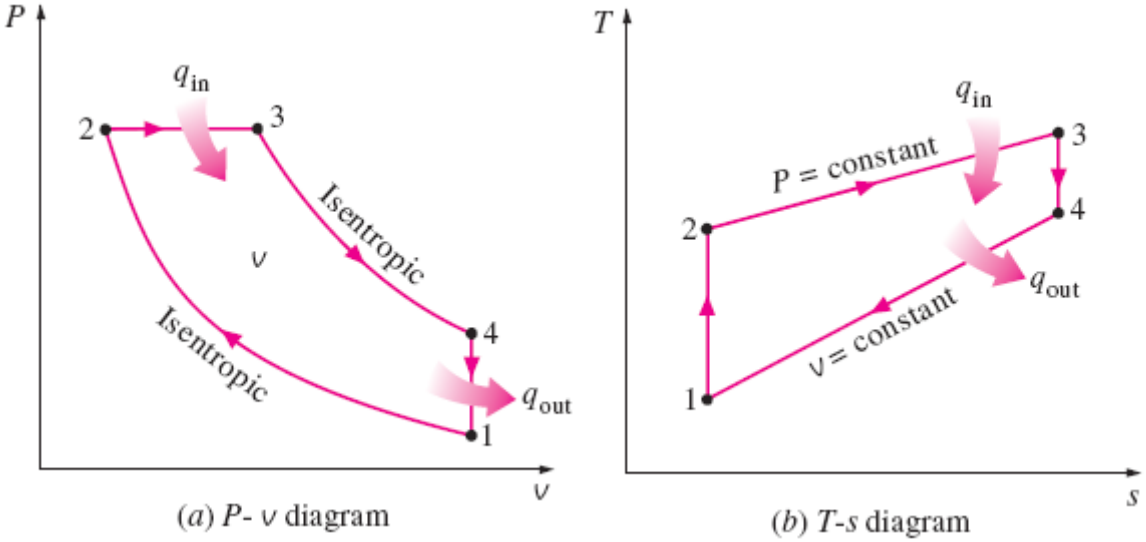

1-2 isentropic compression
2-3 constant-volume heat addition
3-4 isentropic expansion
4-1 constant-volume heat rejection.

$$q_{in} - w_{b,\,out} = u_3 - u_2 \rightarrow q_{in} = P_2(v_3 - v_2) + (u_3 - u_2)$$
$$= h_3 - h_2 = c_p(T_3 - T_2)$$

$$-q_{out} = u_1 - u_4 \rightarrow q_{out} = u_4 - u_1 = c_v(T_4 - T_1)$$

$$\boxed{\eta_{th,\,Diesel} = \frac{w_{net}}{q_{in}} = 1 - \frac{q_{out}}{q_{in}} = 1 - \frac{T_4 - T_1}{k(T_3 - T_2)} = 1 - \frac{T_1(T_4/T_1 - 1)}{kT_2(T_3/T_2 - 1)}}$$

Cutoff ratio

$$r_c = \frac{V_3}{V_2} = \frac{v_3}{v_2}$$

$$\eta_{th,\,Diesel} = 1 - \frac{1}{r^{k-1}}\left[\frac{r_c^k - 1}{k(r_c - 1)}\right]$$

for the same compression ratio

$$\eta_{th,\,Otto} > \eta_{th,\,Diesel}$$

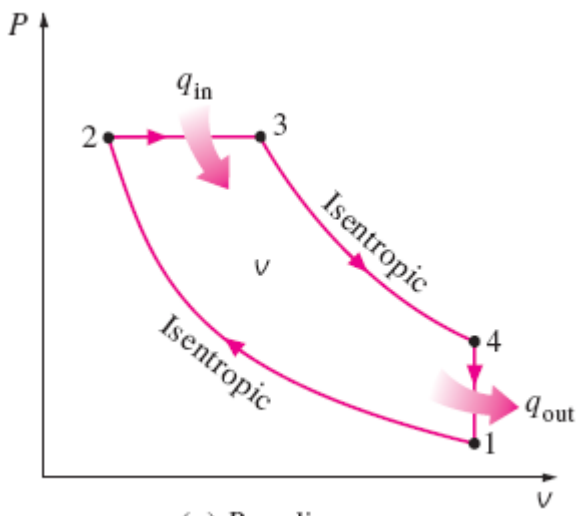

(a) P- v diagram

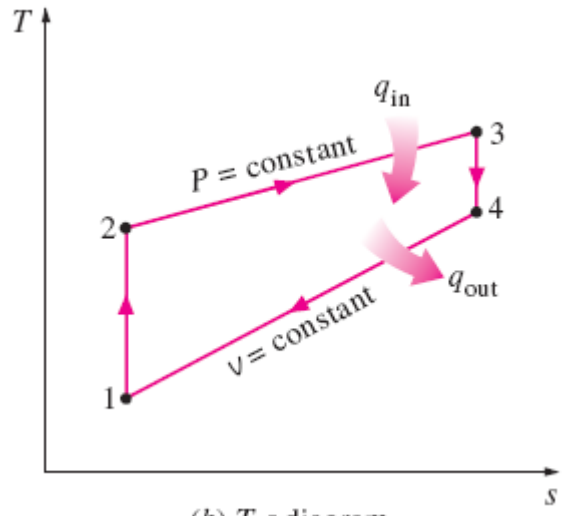

(b) T-s diagram

$$\eta_{\text{th, Diesel}} = 1 - \frac{1}{r^{k-1}}\left[\frac{r_c^k - 1}{k(r_c - 1)}\right]$$

Cutoff ratio

$$r_c = \frac{V_3}{V_2} = \frac{v_3}{v_2}$$

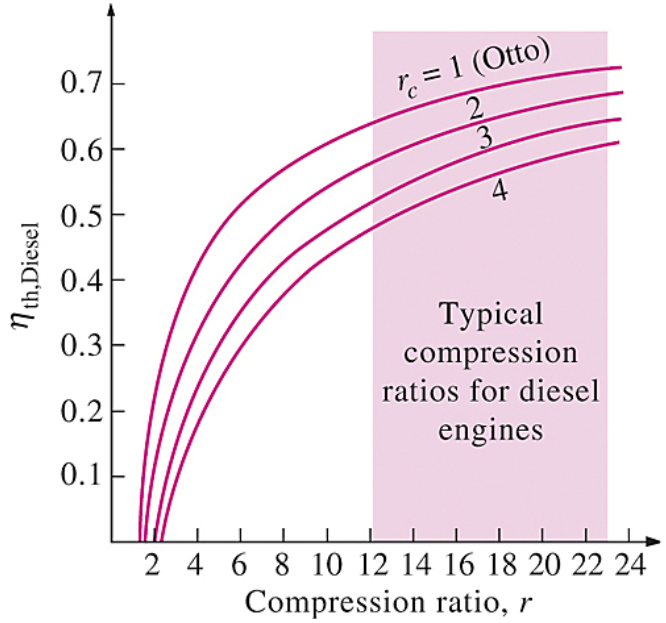

Thermal efficiency of the ideal Diesel cycle as a function of compression and cutoff ratios (k=1.4).

Dual cycle: A more realistic ideal cycle model for modern, high-speed compression ignition engine.

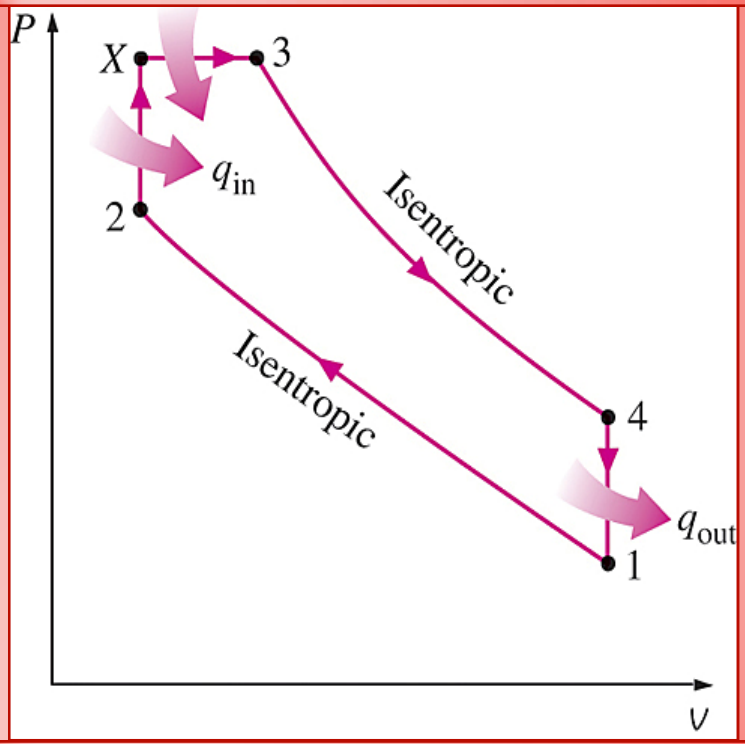

P-v diagram of an ideal dual cycle.

QUESTIONS

Diesel engines operate at higher air-fuel ratios than gasoline engines. Why?

Despite higher power to weight ratios, two-stroke engines are not used in automobiles. Why?

The stationary diesel engines are among the most efficient power producing devices (about 50%). Why?

What is a turbocharger? Why are they mostly used in diesel engines compared to gasoline engines.

STIRLING AND ERICSSON CYCLES

Stirling cycle

- **1-2** *T* = *constant* expansion (heat addition from the external source)
- **2-3** *v* = *constant* regeneration (internal heat transfer from the working fluid to the regenerator)
- **3-4** *T* = *constant* compression (heat rejection to the external sink)
- **4-1** *v* = *constant* regeneration (internal heat transfer from the regenerator back to the working fluid)

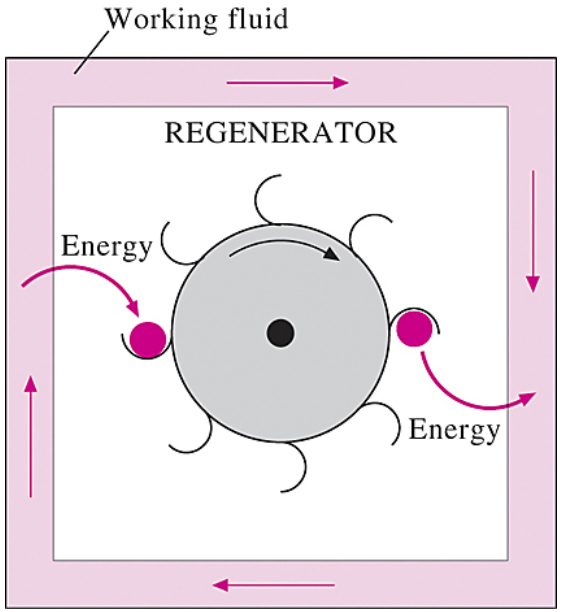

A regenerator is a device that borrows energy from the working fluid during one part of the cycle and pays it back during another part.

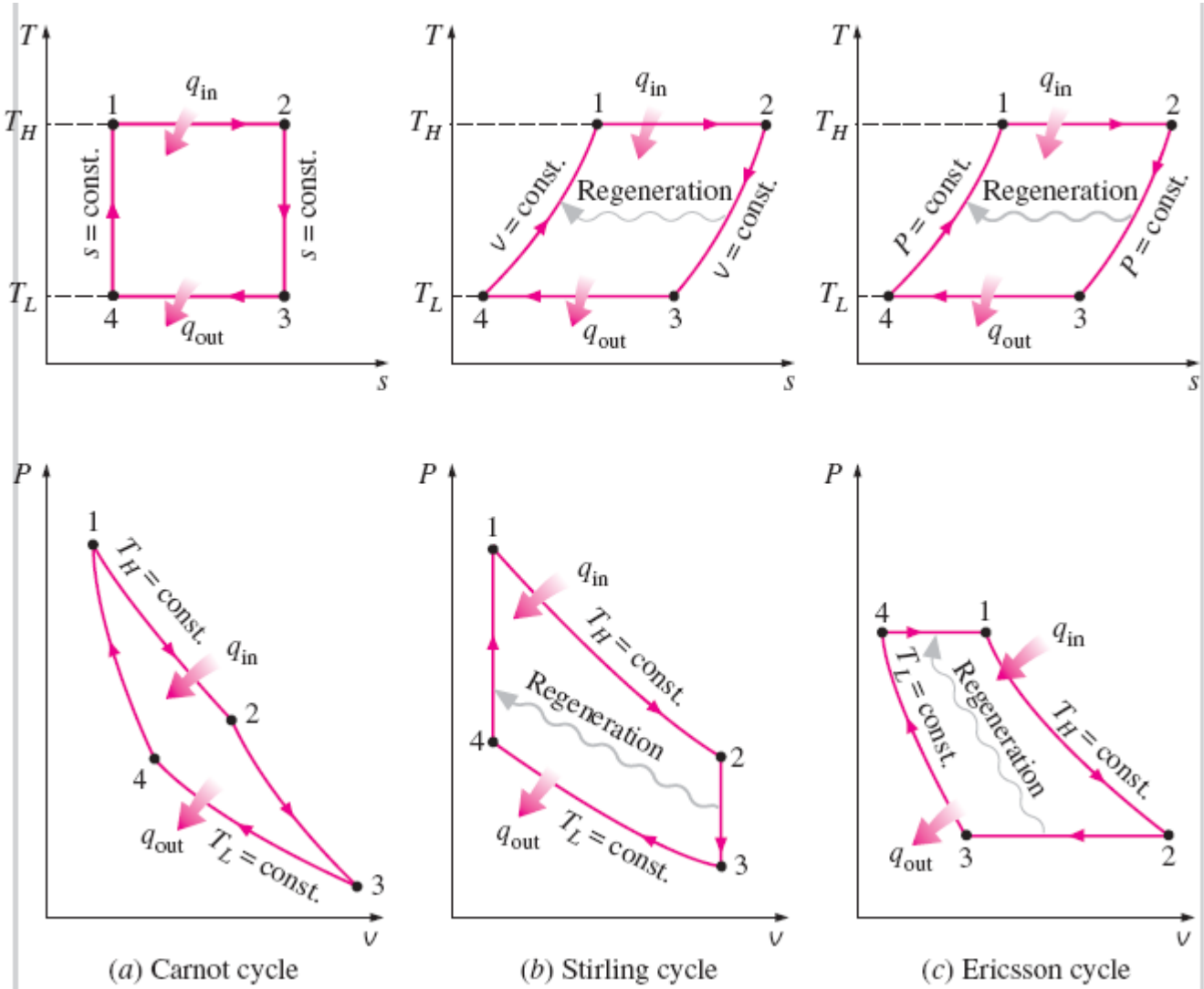

T-s and *P-v* diagrams of Carnot, Stirling, and Ericsson cycles.

The Stirling and Ericsson cycles give a message: ***Regeneration can increase efficiency.***

Both the Stirling and Ericsson cycles are totally reversible, as is the Carnot cycle, and thus:

$$\eta_{\text{th, Stirling}} = \eta_{\text{th, Ericsson}} = \eta_{\text{th, Carnot}} = 1 - \frac{T_L}{T_H}$$

The Ericsson cycle is very much like the Stirling cycle, except that the two constant-volume processes are replaced by two constant-pressure processes.

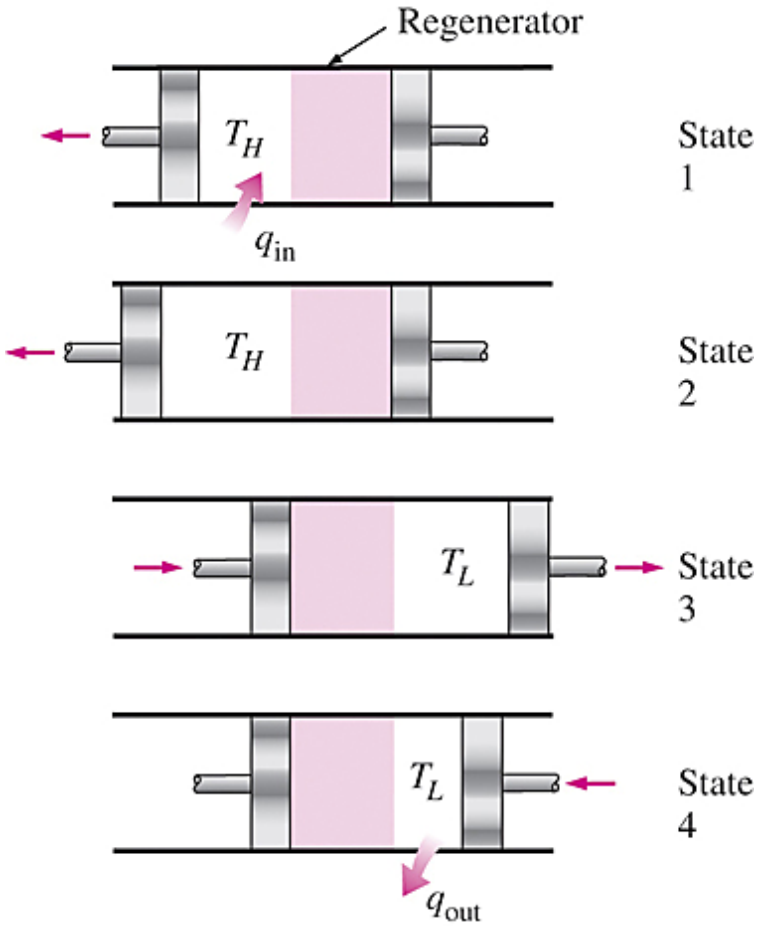

The execution of the Stirling cycle.

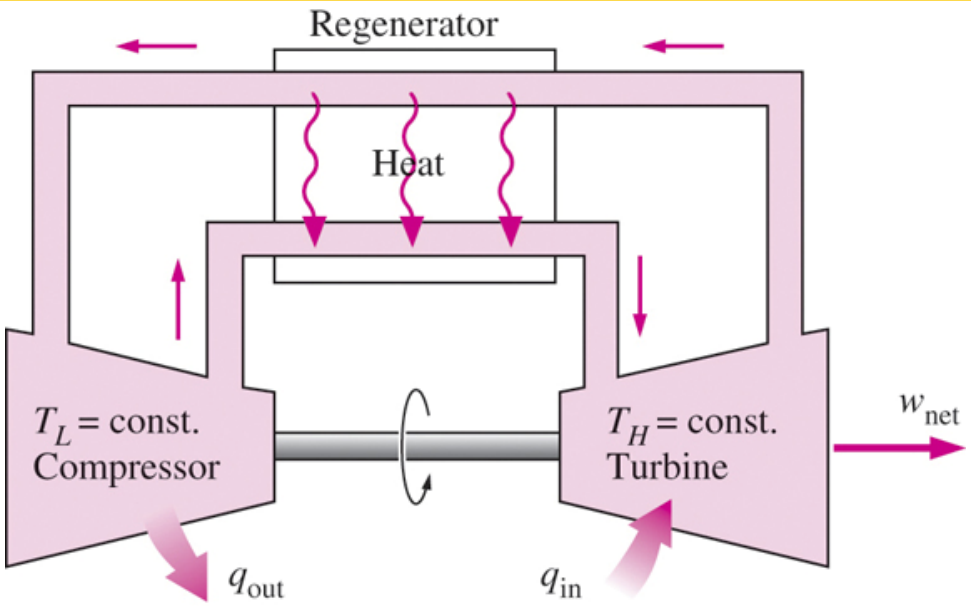

A steady-flow Ericsson engine.

Stirling and Ericsson cycles are difficult to achieve in practice because they involve heat transfer through a differential temperature difference in all components including the regenerator.

This would require providing infinitely large surface areas for heat transfer or allowing an infinitely long time for the process. Neither is practical. In reality, all heat transfer processes will take place through a finite temperature difference, the regenerator will not have an efficiency of 100 percent, and the pressure losses in the regenerator will be considerable.

More research and development are needed before these engines can compete with the gasoline or diesel engines. Both the Stirling and the Ericsson engines are *external combustion* engines.

Despite the physical limitations and impracticalities associated with them, both the Stirling and Ericsson cycles give a strong message to design engineers: *Regeneration can increase efficiency.* It is no coincidence that modern gas-turbine and steam power plants make extensive use of regeneration.

External combustion offers several advantages.

- ✓ A variety of fuels can be used as a source of thermal energy.
- ✓ There is more time for combustion, and thus the combustion process is more complete, which means less air pollution and more energy extraction from the fuel.
- ✓ These engines operate on closed cycles, and thus a working fluid that has the most desirable characteristics can be utilized as the working fluid.
- ✓ Hydrogen and helium are two gases commonly employed in these engines.
- ✓ In fact, the Brayton cycle with intercooling, reheating, and regeneration, which is utilized in large gas-turbine power plants and discussed later in this chapter, closely resembles the Ericsson cycle.

EXAMPLE 9–4

Using an ideal gas as the working fluid, show that the thermal efficiency of an Ericsson cycle is identical to the efficiency of a Carnot cycle operating between the same temperature limits.

Solution It is to be shown that the thermal efficiencies of Carnot and Ericsson cycles are identical.

Analysis Heat is transferred to the working fluid isothermally from an external source at temperature *TH* during process 1-2, and it is rejected again isothermally to an external sink at temperature *TL* during process 3-4.

$$q = T\,\Delta s$$

$$\Delta s = c_p \ln \frac{T_e}{T_i}^{\nearrow 0} - R \ln \frac{P_e}{P_i} = -R \ln \frac{P_e}{P_i}$$

$$q_{\text{in}} = T_H(s_2 - s_1) = T_H\left(-R \ln \frac{P_2}{P_1}\right) = RT_H \ln \frac{P_1}{P_2}$$

$$q_{\text{out}} = T_L(s_4 - s_3) = -T_L\left(-R \ln \frac{P_4}{P_3}\right) = RT_L \ln \frac{P_4}{P_3}$$

since P_1=P_4 and P_3=P_2.

$$\eta_{\text{th, Ericsson}} = 1 - \frac{q_{\text{out}}}{q_{\text{in}}} = 1 - \frac{RT_L \ln(P_4/P_3)}{RT_H \ln(P_1/P_2)} = 1 - \frac{T_L}{T_H}$$

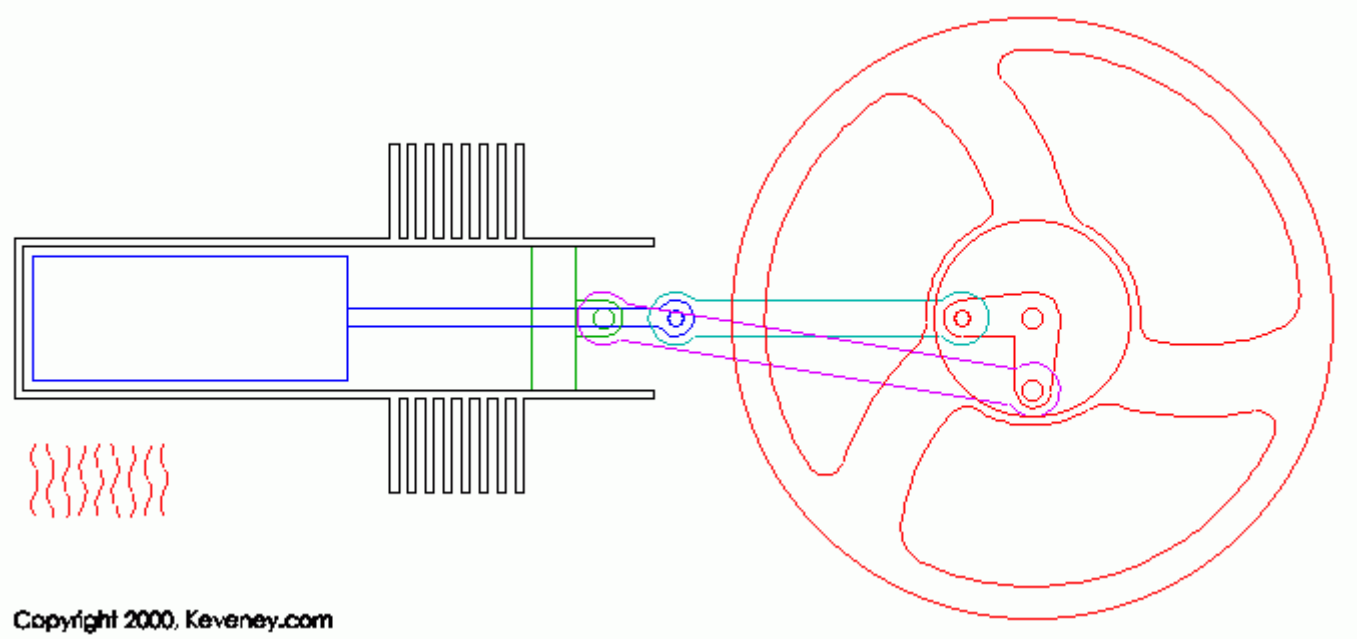
Copyright 2000, Keveney.com

Rejenerative Stirling Cycles

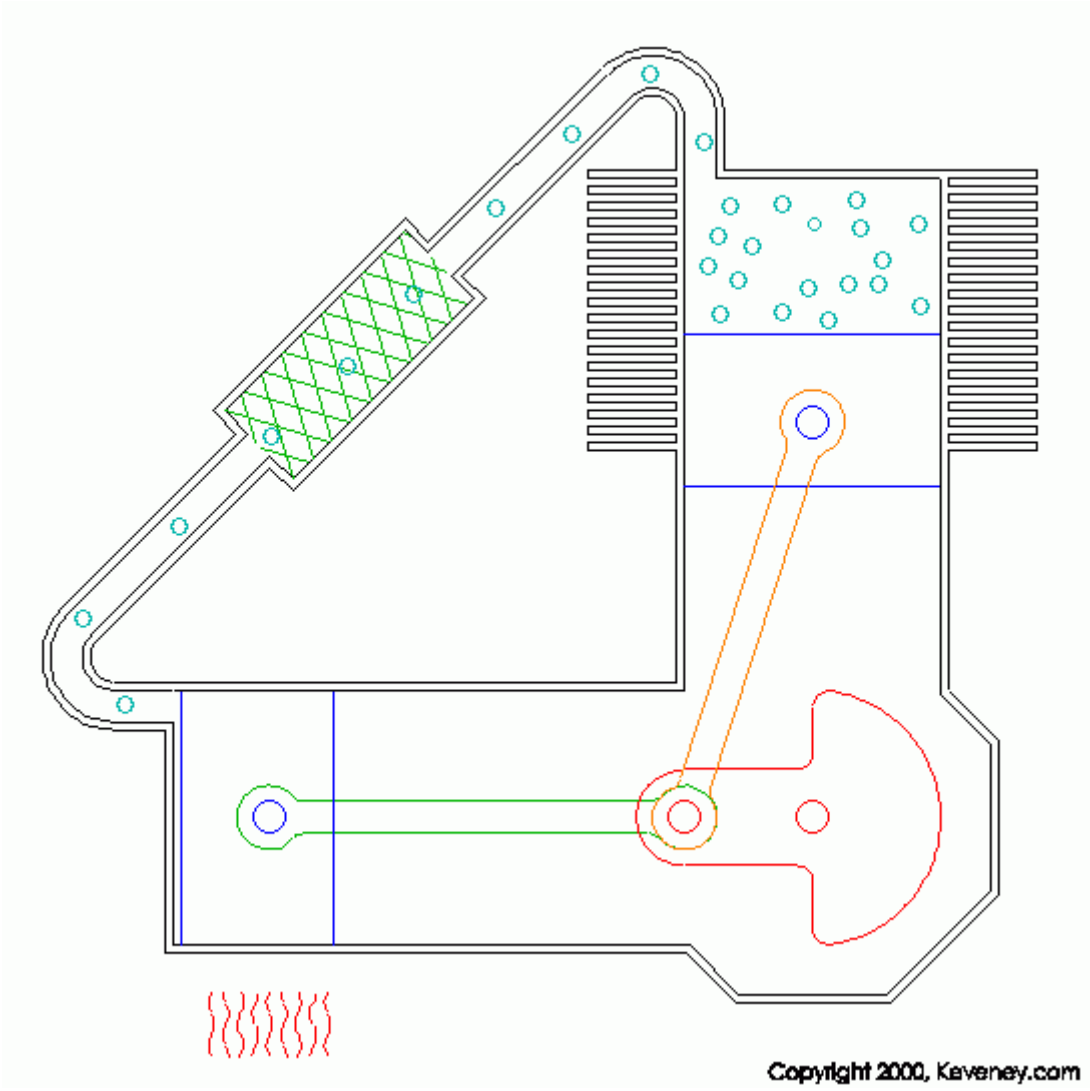

BRAYTON CYCLE: THE IDEAL CYCLE FOR GAS-TURBINE ENGINES

The combustion process is replaced by a constant-pressure heat-addition process from an external source, and the exhaust process is replaced by a constant-pressure heat-rejection process to the ambient air.

1-2 Isentropic compression (in a compressor)
2-3 Constant-pressure heat addition
3-4 Isentropic expansion (in a turbine)
4-1 Constant-pressure heat rejection

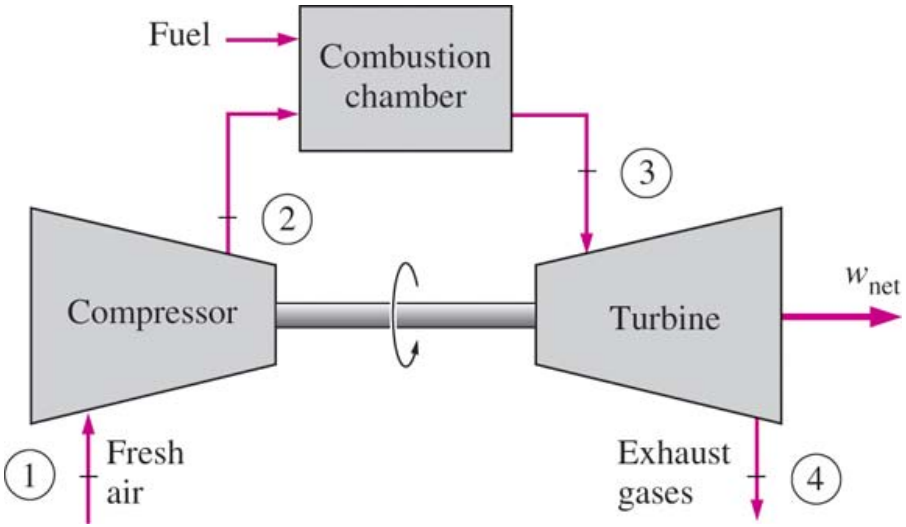

An open-cycle gas-turbine engine.

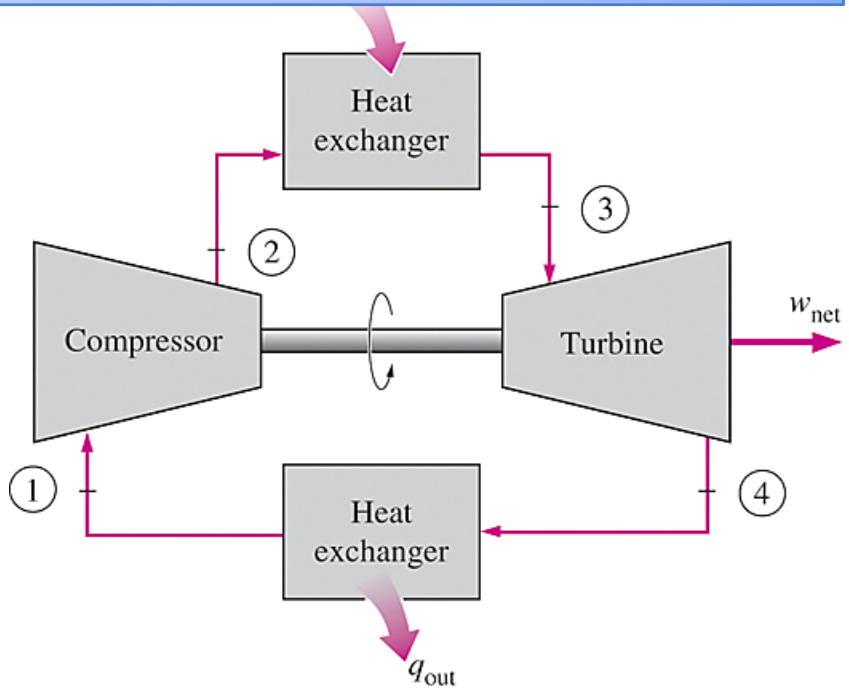

A closed-cycle gas-turbine engine.

$$(q_{in} - q_{out}) + (w_{in} - w_{out}) = h_{exit} - h_{inlet}$$

$$q_{in} = h_3 - h_2 = c_p(T_3 - T_2)$$

$$q_{out} = h_4 - h_1 = c_p(T_4 - T_1)$$

Thermal efficiency

$$\eta_{th,\,Brayton} = \frac{w_{net}}{q_{in}} = 1 - \frac{q_{out}}{q_{in}} = 1 - \frac{c_p(T_4 - T_1)}{c_p(T_3 - T_2)} = 1 - \frac{T_1(T_4/T_1 - 1)}{T_2(T_3/T_2 - 1)}$$

$$\frac{T_2}{T_1} = \left(\frac{P_2}{P_1}\right)^{(k-1)/k} = \left(\frac{P_3}{P_4}\right)^{(k-1)/k} = \frac{T_3}{T_4}$$

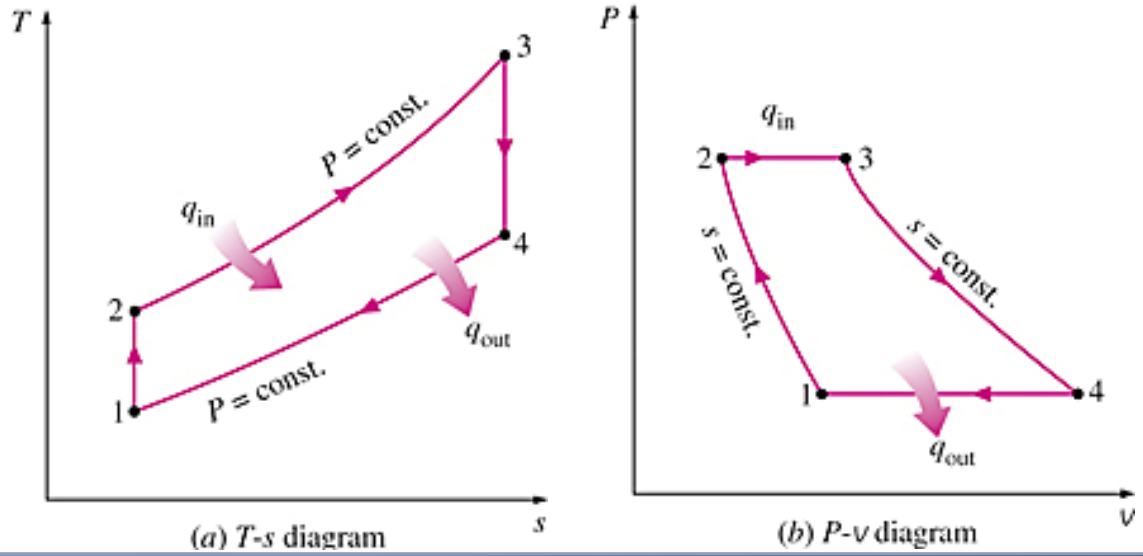

T-s and *P-v* diagrams for the ideal Brayton cycle.

Pressure ratio

$$r_p = \frac{P_2}{P_1}$$

$$\eta_{th,\,Brayton} = 1 - \frac{1}{r_p^{(k-1)/k}}$$

Pressure ratio

$$r_p = \frac{P_2}{P_1}$$

$$\eta_{\text{th, Brayton}} = 1 - \frac{1}{r_p^{(k-1)/k}}$$

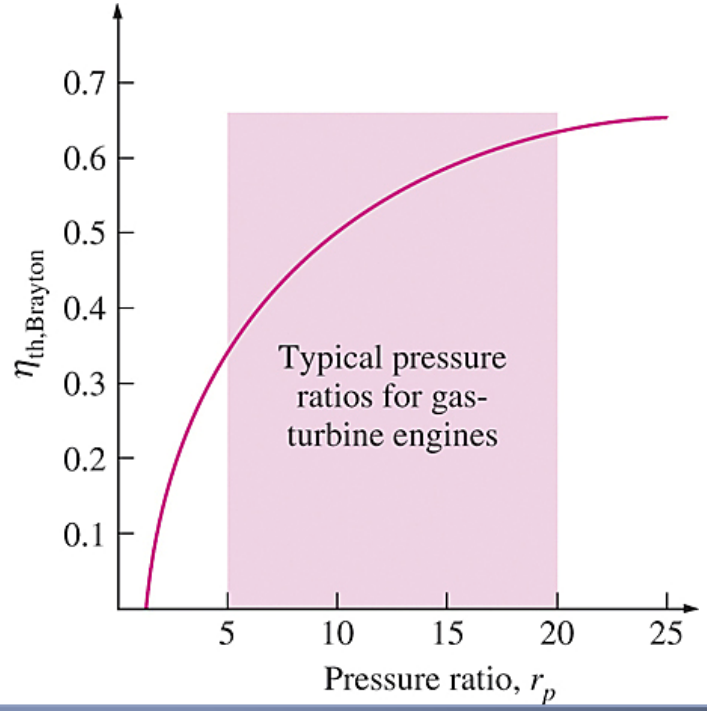

Thermal efficiency of the ideal Brayton cycle as a function of the pressure ratio.

The two major application areas of gas-turbine engines are *aircraft propulsion* and *electric power generation*.

The highest temperature in the cycle is limited by the maximum temperature that the turbine blades can withstand. This also limits the pressure ratios that can be used in the cycle. The air in gas turbines supplies the necessary oxidant for the combustion of the fuel, and it serves as a coolant to keep the temperature of various components within safe limits. An air–fuel ratio of 50 or above is not uncommon.

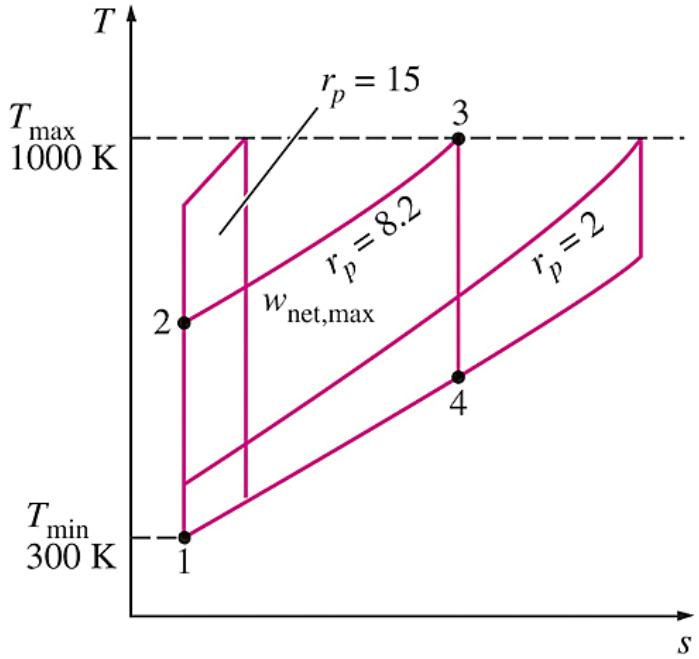

For fixed values of T_{min} and T_{max}, the net work of the Brayton cycle first increases with the pressure ratio, then reaches a maximum at $r_p = (T_{max}/T_{min})^{k/[2(k-1)]}$, and finally decreases.

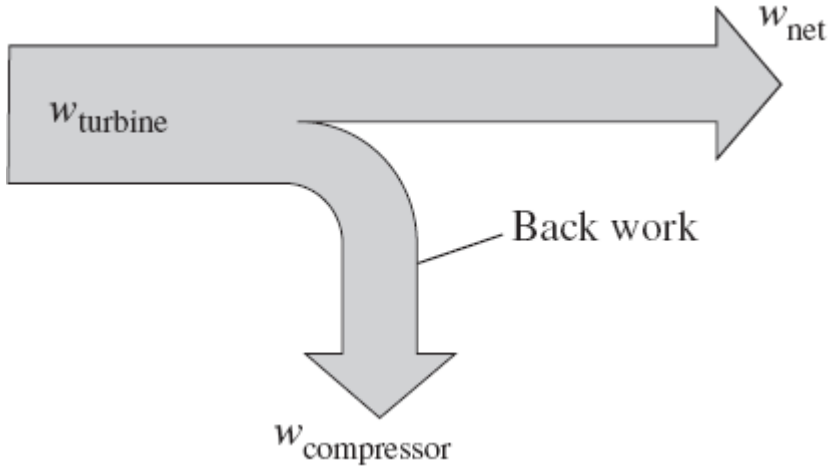

The fraction of the turbine work used to drive the compressor is called the back work ratio.

Development of Gas Turbines

1. Increasing the turbine inlet (or firing) temperatures
2. Increasing the efficiencies of turbomachinery components (turbines compressors)
3. Adding modifications to the basic cycle (intercooling, regeneration or recuperation, and reheating).

Deviation of Actual Gas-Turbine Cycles from Idealized Ones

Reasons: Irreversibilities in turbine and compressors, pressure drops, heat losses

Isentropic efficiencies of the compressor and turbine

$$\eta_C = \frac{w_s}{w_a} \cong \frac{h_{2s} - h_1}{h_{2a} - h_1}$$

$$\eta_T = \frac{w_a}{w_s} \cong \frac{h_3 - h_{4a}}{h_3 - h_{4s}}$$

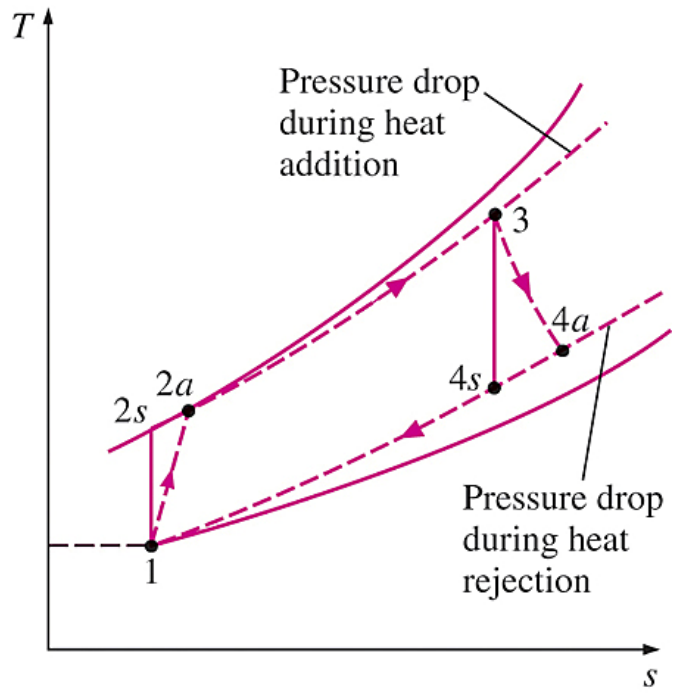

The deviation of an actual gas-turbine cycle from the ideal Brayton cycle as a result of irreversibilities.

EXAMPLE 9–5

A gas-turbine power plant operating on an ideal Brayton cycle has a pressure ratio of 8. The gas temperature is 300 K at the compressor inlet and 1300 K at the turbine inlet. Utilizing the air-standard assumptions, determine (*a*) the gas temperature at the exits of the compressor and the turbine, (*b*) the back work ratio, and (*c*) the thermal efficiency.

Solution A power plant operating on the ideal Brayton cycle with a specified pressure ratio is considered. The compressor and turbine exit temperatures, back work ratio, and the thermal efficiency are to be determined.

Assumptions **1** Steady operating conditions exist. **2** The air-standard assumptions are applicable. **3** Kinetic and potential energy changes are negligible. **4** The variation of specific heats with temperature is to be considered.

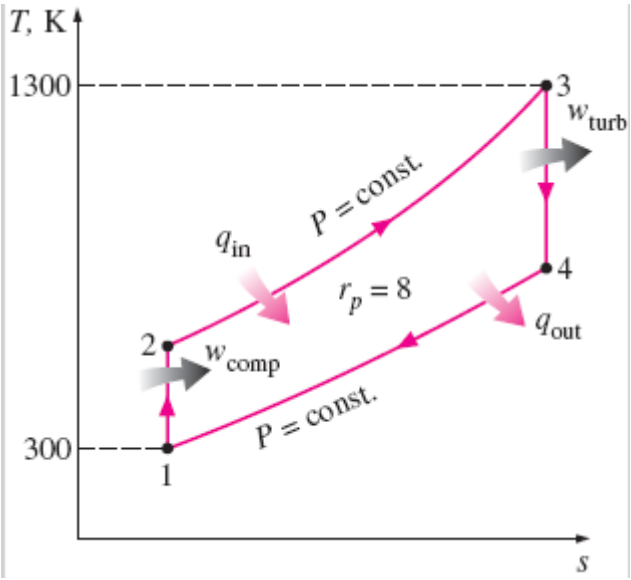

(*a*) The air temperatures at the compressor and turbine exits are determined from isentropic relations.

Process 1-2 (isentropic compression of an ideal gas):

$$T_1 = 300 \text{ K} \rightarrow h_1 = 300.19 \text{ kJ/kg}$$

$$P_{r1} = 1.386$$

at compressor exit

$$P_{r2} = \frac{P_2}{P_1} P_{r1} = (8)(1.386) = 11.09 \rightarrow T_2 = \mathbf{540\ K}$$

$$h_2 = 544.35 \text{ kJ/kg}$$

Process 3-4 (isentropic expansion of an ideal gas):

$$T_3 = 1300\ \text{K} \rightarrow h_3 = 1395.97\ \text{kJ/kg} \qquad P_{r3} = 330.9$$

at turbine exit

$$P_{r4} = \frac{P_4}{P_3} P_{r3} = \left(\frac{1}{8}\right)(330.9) = 41.36 \rightarrow T_4 = \mathbf{770\ K} \quad h_4 = 789.11\ \text{kJ/kg}$$

(*b*) To find the back work ratio, we need to find the work input to the compressor and the work output of the turbine:

$$w_{\text{comp, in}} = h_2 - h_1 = 544.35 - 300.19 = 244.16\ \text{kJ/kg}$$

$$w_{\text{turb, out}} = h_3 - h_4 = 1395.97 - 789.11 = 606.86\ \text{kJ/kg}$$

$$\text{Back work ratio } r_{\text{bw}} = \frac{w_{\text{comp, in}}}{w_{\text{turb, out}}} = \frac{244.16\ \text{kJ/kg}}{606.86\ \text{kJ/kg}} = \mathbf{0.402}$$

(*c*) The thermal efficiency of the cycle is the ratio of the net power output to the total heat input:

$$q_{\text{in}} = h_3 - h_2 = 1395.97 - 544.35 = 851.62\ \text{kJ/kg}$$

$$w_{\text{net}} = w_{\text{out}} - w_{\text{in}} = 606.86 - 244.16 = 362.7\ \text{kJ/kg}$$

$$\eta_{\text{th}} = \frac{w_{\text{net}}}{q_{\text{in}}} = \frac{362.7\ \text{kJ/kg}}{851.62\ \text{kJ/kg}} = \mathbf{0.426\ or\ 42.6\%}$$

The thermal efficiency could also be determined from

$$\eta_{th} = 1 - \frac{q_{out}}{q_{in}}$$

$$q_{out} = h_4 - h_1 = 789.11 - 300.19 = 488.92 \text{ kJ/kg}$$

$$\eta_{th,\ Brayton} = 1 - \frac{1}{r_p^{(k-1)/k}} = 1 - \frac{1}{8^{(1.4-1)/1.4}} = 0.448$$

EXAMPLE 9–6

Assuming a compressor efficiency of 80 percent and a turbine efficiency of 85 percent, determine (*a*) the back work ratio, (*b*) the thermal efficiency, and (*c*) the turbine exit temperature of the gas-turbine cycle discussed in Example 9–5.

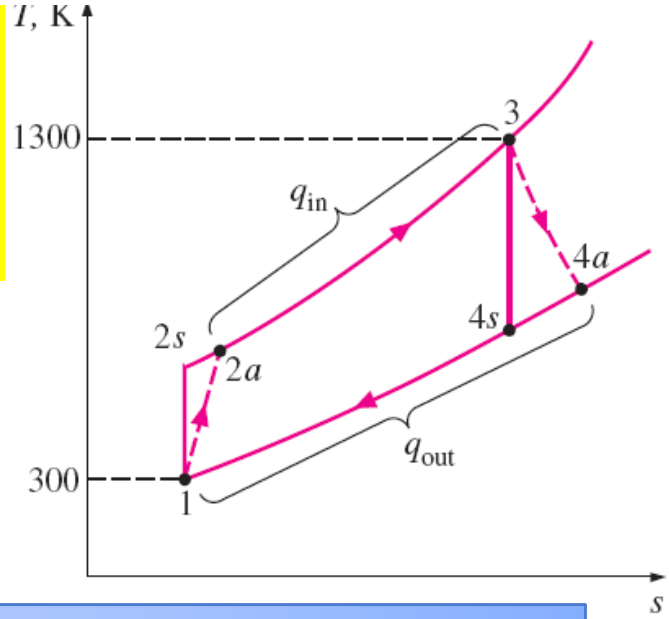

Solution The Brayton cycle discussed in Example 9–5 is reconsidered. For specified turbine and compressor efficiencies, the back work ratio, the thermal efficiency, and the turbine exit temperature are to be determined.

(*a*) The actual compressor work and turbine work are determined by using the definitions of compressor and turbine efficiencies,

Compressor:
$$w_{\text{comp, in}} = \frac{w_s}{\eta_C} = \frac{244.16 \text{ kJ/kg}}{0.80} = 305.20 \text{ kJ/kg}$$

Turbine:
$$w_{\text{turb, out}} = \eta_T w_s = (0.85)(606.86 \text{ kJ/kg}) = 515.83 \text{ kJ/kg}$$

$$r_{\text{bw}} = \frac{w_{\text{comp, in}}}{w_{\text{turb, out}}} = \frac{305.20 \text{ kJ/kg}}{515.83 \text{ kJ/kg}} = \mathbf{0.592}$$

That is, the compressor is now consuming 59.2 % of the work produced by the turbine (up from 40.2 %). This increase is due to the irreversibilities that occur within the compressor and the turbine.

(*b*) In this case, air will leave the compressor at a higher temperature and enthalpy, which are determined to be

$$w_{\text{comp, in}} = h_{2a} - h_1 \rightarrow h_{2a} = h_1 + w_{\text{comp, in}}$$
$$= 300.19 + 305.20$$
$$= 605.39 \text{ kJ/kg} \quad (\text{and } T_{2a} = 598 \text{ K})$$

$$q_{\text{in}} = h_3 - h_{2a} = 1395.97 - 605.39 = 790.58 \text{ kJ/kg}$$
$$w_{\text{net}} = w_{\text{out}} - w_{\text{in}} = 515.83 - 305.20 = 210.63 \text{ kJ/kg}$$

$$\eta_{\text{th}} = \frac{w_{\text{net}}}{q_{\text{in}}} = \frac{210.63 \text{ kJ/kg}}{790.58 \text{ kJ/kg}} = \mathbf{0.266 \text{ or } 26.6\%}$$

(*c*) The air temperature at the turbine exit is determined from an energy balance on the turbine:

$$w_{\text{turb, out}} = h_3 - h_{4a} \rightarrow h_{4a} = h_3 - w_{\text{turb, out}}$$
$$= 1395.97 - 515.83$$
$$= 880.14 \text{ kJ/kg}$$

Then, from Table A–17,

$$T_{4a} = \mathbf{853 \text{ K}}$$

This value is considerably higher than the air temperature at the compressor exit (T_{2a}=598 K), which suggests the use of regeneration to reduce fuel cost.

THE BRAYTON CYCLE WITH REGENERATION

In gas-turbine engines, the temperature of the exhaust gas leaving the turbine is often considerably higher than the temperature of the air leaving the compressor.

Therefore, the high-pressure air leaving the compressor can be heated by the hot exhaust gases in a counter-flow heat exchanger (a *regenerator* or a *recuperator*).

The thermal efficiency of the Brayton cycle increases as a result of regeneration since less fuel is used for the same work output.

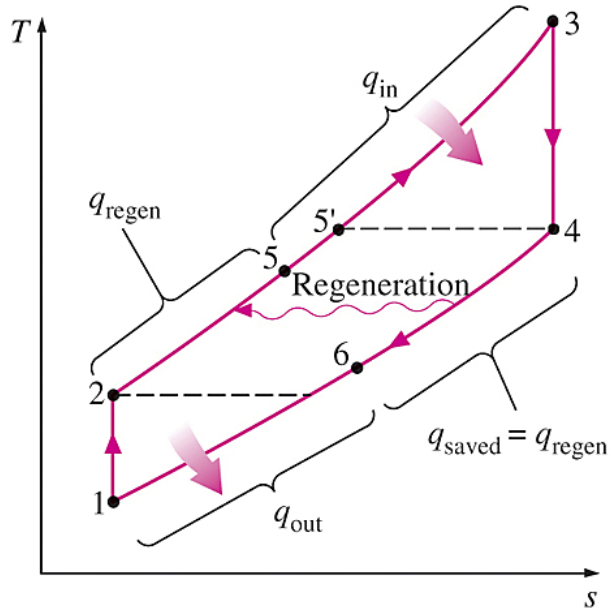

T-s diagram of a Brayton cycle with regeneration.

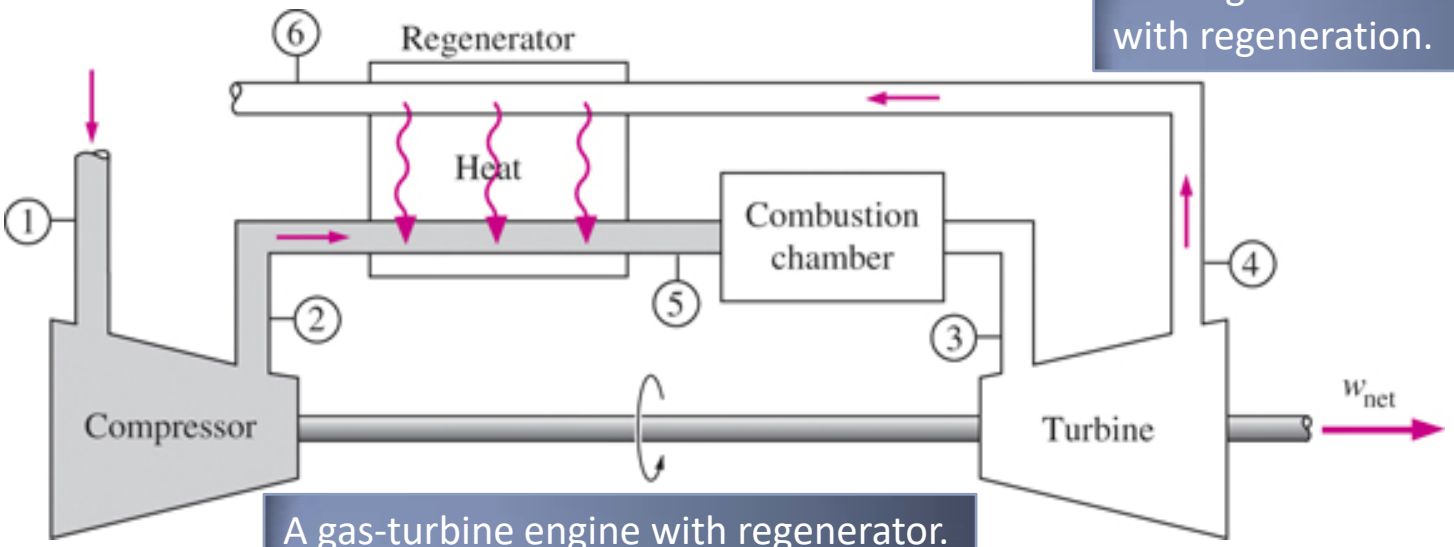

A gas-turbine engine with regenerator.

Effectiveness of regenerator

The thermal efficiency depends on the ratio of the minimum to maximum temperatures as well as the pressure ratio.

Regeneration is most effective at lower pressure ratios and low minimum-to-maximum temperature ratios.

$$q_{\text{regen, max}} = h_{5'} - h_2 = h_4 - h_2$$

$$q_{\text{regen, act}} = h_5 - h_2$$

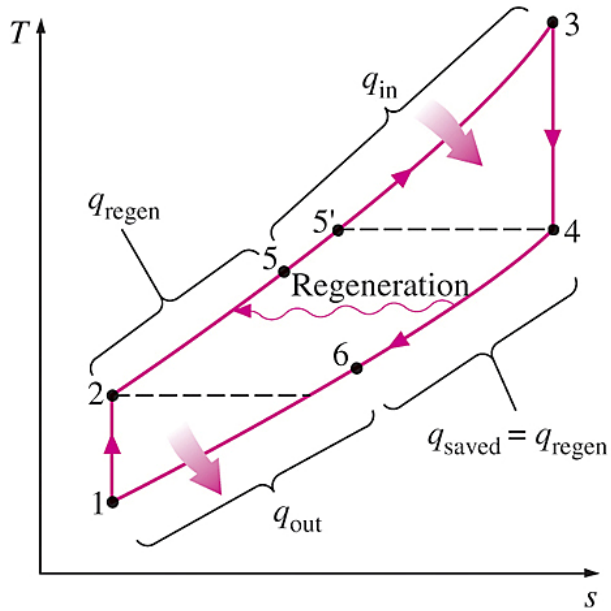

T-s diagram of a Brayton cycle with regeneration.

Effectiveness of regenerator

$$\epsilon = \frac{q_{\text{regen, act}}}{q_{\text{regen, max}}} = \frac{h_5 - h_2}{h_4 - h_2}$$

Effectiveness under cold-air standard assumptions

$$\epsilon \cong \frac{T_5 - T_2}{T_4 - T_2}$$

$$\eta_{\text{th, regen}} = 1 - \left(\frac{T_1}{T_3}\right)(r_p)^{(k-1)/k}$$

Under cold-air standard assumptions

Can regeneration be used at high pressure ratios?

Pressure ratio

$$r_p = \frac{P_2}{P_1}$$

$$\eta_{\text{th, regen}} = 1 - \left(\frac{T_1}{T_3}\right)(r_p)^{(k-1)/k}$$

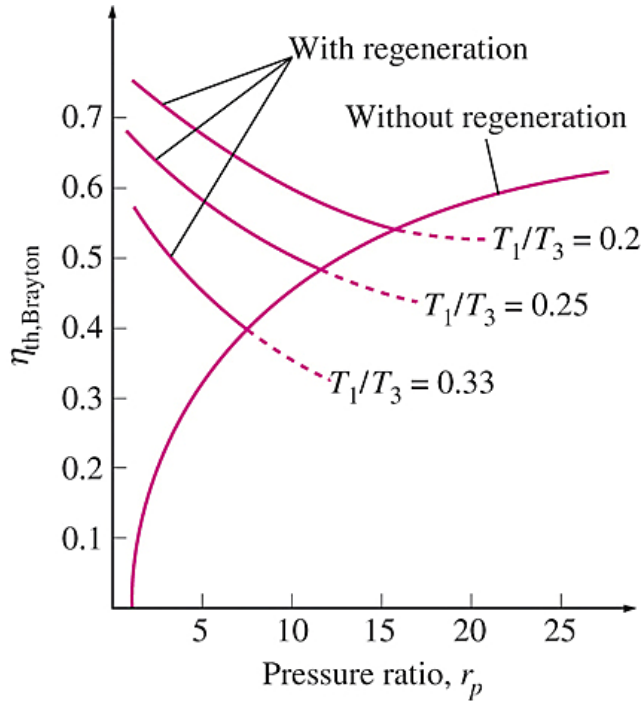

Thermal efficiency of the ideal Brayton cycle with and without regeneration.

EXAMPLE 9–7

Determine the thermal efficiency of the gas-turbine power plant described in Example 9–6 if a regenerator having an effectiveness of 80 percent is installed.

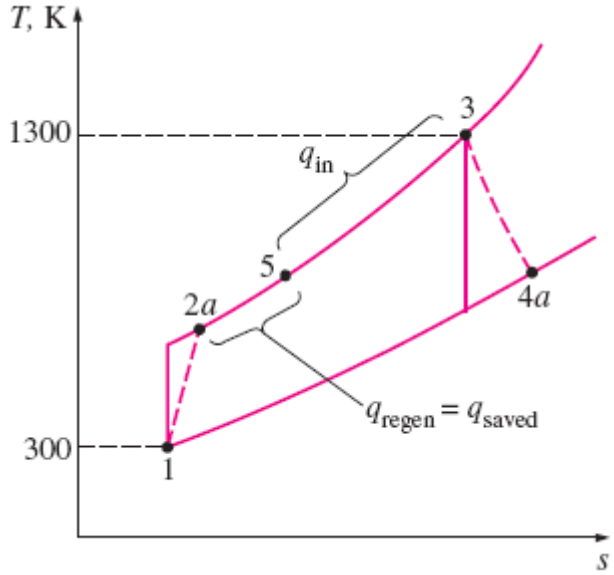

Solution The gas-turbine power plant discussed in Example 9–6 is equipped with a regenerator. For a specified effectiveness, the thermal efficiency of the cycle is to be determined.

Analysis We first determine the enthalpy of the air at the exit of the regenerator, using the definition of effectiveness:

$$\epsilon = \frac{h_5 - h_{2a}}{h_{4a} - h_{2a}}$$

$$0.80 = \frac{(h_5 - 605.39)\ \text{kJ/kg}}{(880.14 - 605.39)\ \text{kJ/kg}} \rightarrow h_5 = 825.19\ \text{kJ/kg}$$

$$q_{in} = h_3 - h_5 = (1395.97 - 825.19)\ \text{kJ/kg} = 570.78\ \text{kJ/kg}$$

$$\eta_{th} = \frac{w_{net}}{q_{in}} = \frac{210.63\ \text{kJ/kg}}{570.78\ \text{kJ/kg}} = \mathbf{0.369\ or\ 36.9\%}$$

Discussion Note that the thermal efficiency of the power plant has gone up from 26.6 to 36.9 percent as a result of installing a regenerator that helps to recuperate some of the thermal energy of the exhaust gases.

THE BRAYTON CYCLE WITH INTERCOOLING, REHEATING, AND REGENERATION

For minimizing work input to compressor and maximizing work output from turbine:

$$\frac{P_2}{P_1} = \frac{P_4}{P_3} \quad \text{and} \quad \frac{P_6}{P_7} = \frac{P_8}{P_9}$$

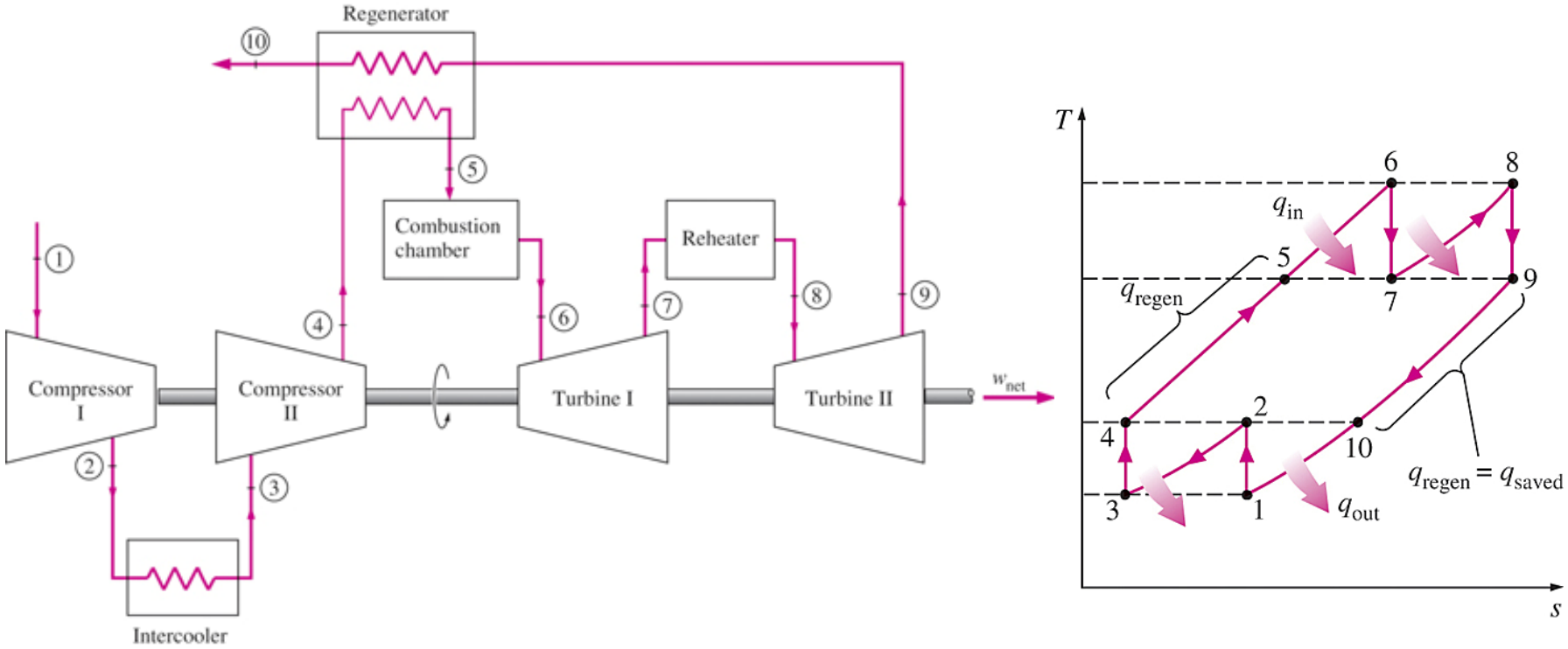

A gas-turbine engine with two-stage compression with intercooling, two-stage expansion with reheating, and regeneration and its *T-s* diagram.

Multistage compression with intercooling: The work required to compress a gas between two specified pressures can be decreased by carrying out the compression process in stages and cooling the gas in between. This keeps the specific volume as low as possible.

Multistage expansion with reheating keeps the specific volume of the working fluid as high as possible during an expansion process, thus maximizing work output.

Intercooling and reheating always decreases the thermal efficiency unless they are accompanied by regeneration. **Why?**

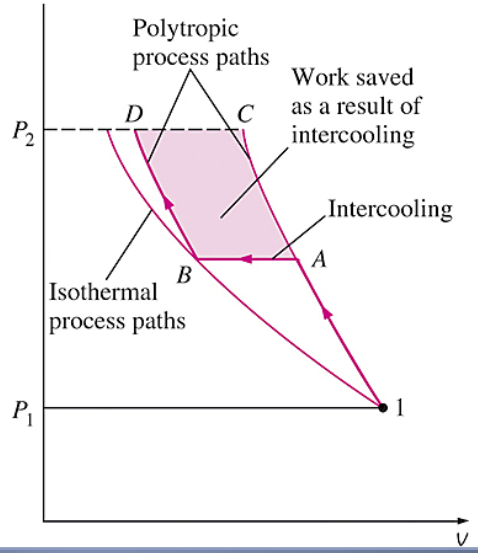

Comparison of work inputs to a single-stage compressor (1*AC*) and a two-stage compressor with intercooling (1*ABD*).

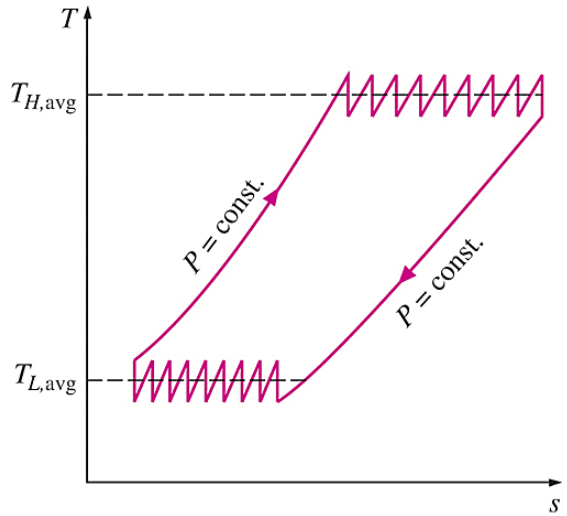

Compression and expansion stages increases, the gas-turbine cycle with intercooling, reheating, and regeneration approaches the Ericsson cycle.

EXAMPLE 9–8

An ideal gas-turbine cycle with two stages of compression and two stages of expansion has an overall pressure ratio of 8. Air enters each stage of the compressor at 300 K and each stage of the turbine at 1300 K. Determine the back work ratio and the thermal efficiency of this gas-turbine cycle, assuming (*a*) no regenerators and (*b*) an ideal regenerator with 100 percent effectiveness. Compare the results with those obtained in Example 9–5.

Solution An ideal gas-turbine cycle with two stages of compression and two stages of expansion is considered. The back work ratio and the thermal efficiency of the cycle are to be determined for the cases of no regeneration and maximum regeneration.

Assumptions **1** Steady operating conditions exist. **2** The air-standard assumptions are applicable. **3** Kinetic and potential energy changes are negligible.

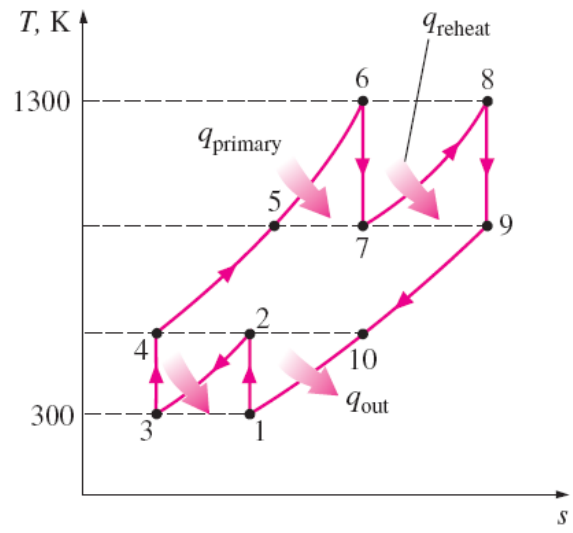

$$\frac{P_2}{P_1} = \frac{P_4}{P_3} = \sqrt{8} = 2.83 \quad \text{and} \quad \frac{P_6}{P_7} = \frac{P_8}{P_9} = \sqrt{8} = 2.83$$

At inlets:	$T_1 = T_3,$	$h_1 = h_3$	and	$T_6 = T_8,$	$h_6 = h_8$
At exits:	$T_2 = T_4,$	$h_2 = h_4$	and	$T_7 = T_9,$	$h_7 = h_9$

(*a*) In the absence of any regeneration, the back work ratio and the thermal efficiency are determined by using data from Table A–17 as follows:

$$T_1 = 300\ \text{K} \rightarrow h_1 = 300.19\ \text{kJ/kg} \qquad P_{r1} = 1.386$$

$$P_{r2} = \frac{P_2}{P_1} P_{r1} = \sqrt{8}(1.386) = 3.92 \rightarrow T_2 = 403.3\ \text{K} \qquad h_2 = 404.33\ \text{kJ/kg}$$

$$T_6 = 1300\ \text{K} \rightarrow h_6 = 1395.97\ \text{kJ/kg} \qquad P_{r6} = 330.9$$

$$P_{r7} = \frac{P_7}{P_6} P_{r6} = \frac{1}{\sqrt{8}}(330.9) = 117.0 \rightarrow T_7 = 1006.4\ \text{K} \qquad h_7 = 1053.35\ \text{kJ/kg}$$

$$w_{\text{comp, in}} = 2(w_{\text{comp, in, I}}) = 2(h_2 - h_1) = 2(404.33 - 300.19) = 208.28\ \text{kJ/kg}$$

$$w_{\text{turb, out}} = 2(w_{\text{turb, out, I}}) = 2(h_6 - h_7) = 2(1395.97 - 1053.35) = 685.24\ \text{kJ/kg}$$

$$w_{\text{net}} = w_{\text{turb, out}} - w_{\text{comp, in}} = 685.24 - 208.28 = 476.96\ \text{kJ/kg}$$

$$q_{\text{in}} = q_{\text{primary}} + q_{\text{reheat}} = (h_6 - h_4) + (h_8 - h_7)$$

$$= (1395.97 - 404.33) + (1395.97 - 1053.35) = 1334.26\ \text{kJ/kg}$$

$$r_{\text{bw}} = \frac{w_{\text{comp, in}}}{w_{\text{turb, out}}} = \frac{208.28\ \text{kJ/kg}}{685.24\ \text{kJ/kg}} = \mathbf{0.304\ or\ 30.4\%}$$

$$\eta_{\text{th}} = \frac{w_{\text{net}}}{q_{\text{in}}} = \frac{476.96\ \text{kJ/kg}}{1334.26\ \text{kJ/kg}} = \mathbf{0.357\ or\ 35.7\%}$$

A comparison of these results with those obtained in Example 9–5 reveals that multistage compression with intercooling and multistage expansion with reheating improve the back work ratio (it drops from 40.2 to 30.4 %) but hurt the thermal efficiency (it drops from 42.6 to 35.7 %).

(*b*) an ideal regenerator with 100 percent effectiveness.

The heat input and the thermal efficiency in this case are

$$q_{in} = q_{primary} + q_{reheat} = (h_6 - h_5) + (h_8 - h_7)$$
$$= (1395.97 - 1053.35) + (1395.97 - 1053.35) = 685.24 \text{ kJ/kg}$$

$$\eta_{th} = \frac{w_{net}}{q_{in}} = \frac{476.96 \text{ kJ/kg}}{685.24 \text{ kJ/kg}} = \mathbf{0.696 \text{ or } 69.6\%}$$

That is, the thermal efficiency almost doubles as a result of regeneration compared to the no-regeneration case. The overall effect of two-stage compression and expansion with intercooling, reheating, and regeneration on the thermal efficiency is an increase of 63 %. and the thermal efficiency will approach.

$$\eta_{th,\,Ericsson} = \eta_{th,\,Carnot} = 1 - \frac{T_L}{T_H} = 1 - \frac{300 \text{ K}}{1300 \text{ K}} = 0.769$$

Adding a second stage increases the thermal efficiency from 42.6 to 69.6 %, an increase of 27 % points. This is a significant increase in efficiency. Adding more stages, however can increase the efficiency an additional 7.3 % points at most, and usually cannot be justified economically.

IDEAL JET-PROPULSION CYCLES

Gas-turbine engines are widely used to power aircraft because they are light and compact and have a high power-to-weight ratio.

Aircraft gas turbines operate on an open cycle called a **jet-propulsion cycle**.

The ideal jet-propulsion cycle differs from the simple ideal Brayton cycle in that the gases are not expanded to the ambient pressure in the turbine. Instead, they are expanded to a pressure such that the power produced by the turbine is just sufficient to drive the compressor and the auxiliary equipment.

The net work output of a jet-propulsion cycle is zero. The gases that exit the turbine at a relatively high pressure are subsequently accelerated in a nozzle to provide the thrust to propel the aircraft.

Aircraft are propelled by accelerating a fluid in the opposite direction to motion.

400MW (MEGAWATT) GAS TURBINE

In jet engines, the high-temperature and high-pressure gases leaving the turbine are accelerated in a nozzle to provide thrust.

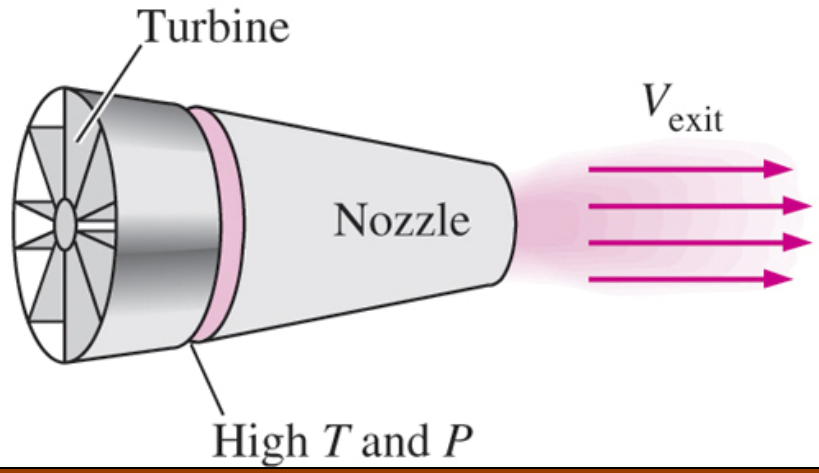

Thrust (propulsive force)

$$F = (\dot{m}V)_{\text{exit}} - (\dot{m}V)_{\text{inlet}} = \dot{m}(V_{\text{exit}} - V_{\text{inlet}}) \qquad (\text{N})$$

Propulsive power

$$\dot{W}_P = (F)V_{\text{aircraft}} = \dot{m}(V_{\text{exit}} - V_{\text{inlet}})V_{\text{aircraft}} \qquad (\text{kW})$$

Propulsive efficiency

$$\eta_P = \frac{\text{Propulsive power}}{\text{Energy input rate}} = \frac{\dot{W}_P}{\dot{Q}_{\text{in}}}$$

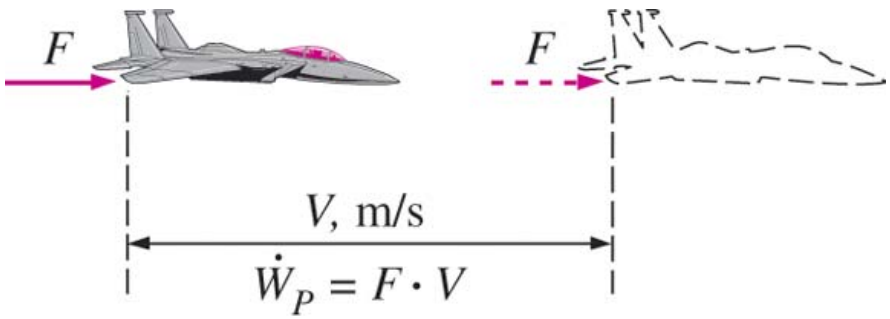

Propulsive power is the thrust acting on the aircraft through a distance per unit time.

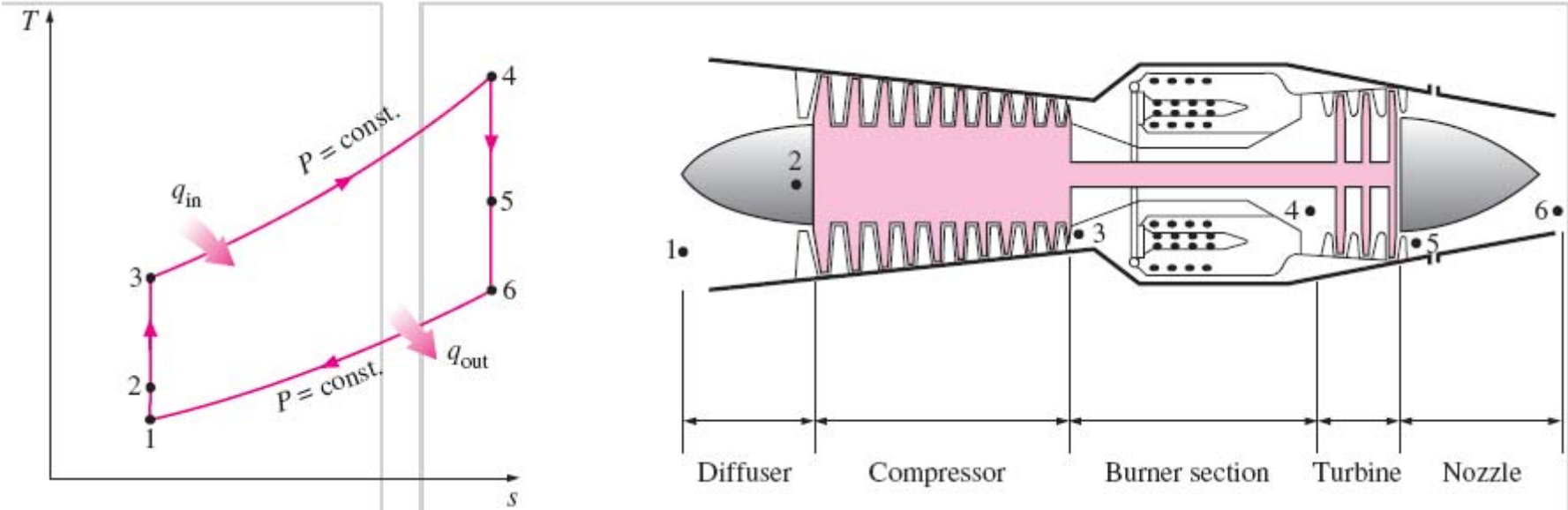

Basic components of a turbojet engine and the *T-s* diagram for the ideal turbojet cycle.

Modifications to Turbojet Engines

The first airplanes built were all propeller-driven, with propellers powered by engines essentially identical to automobile engines.

Both propeller-driven engines and jet-propulsion-driven engines have their own strengths and limitations, and several attempts have been made to combine the desirable characteristics of both in one engine.

Two such modifications are the ***propjet engine*** and the ***turbofan engine***.

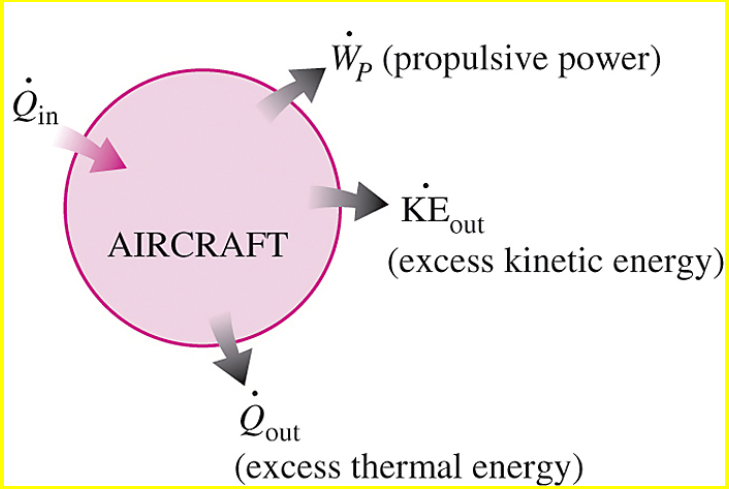

Energy supplied to an aircraft (from the burning of a fuel) manifests itself in various forms.

A turbofan engine.

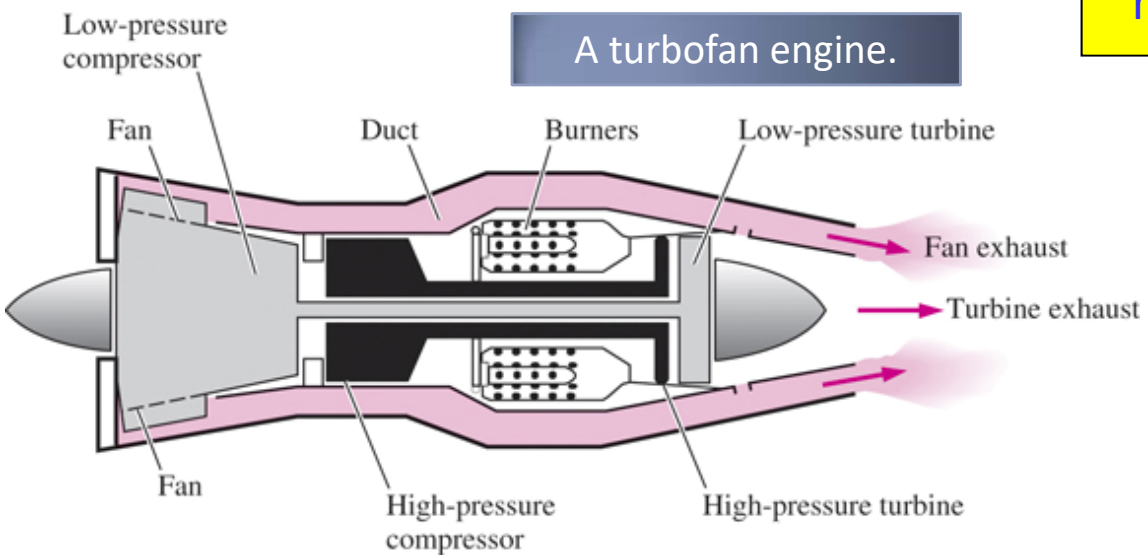

The most widely used engine in aircraft propulsion is the **turbofan** (or *fanjet*) engine wherein a large fan driven by the turbine forces a considerable amount of air through a duct (cowl) surrounding the engine.

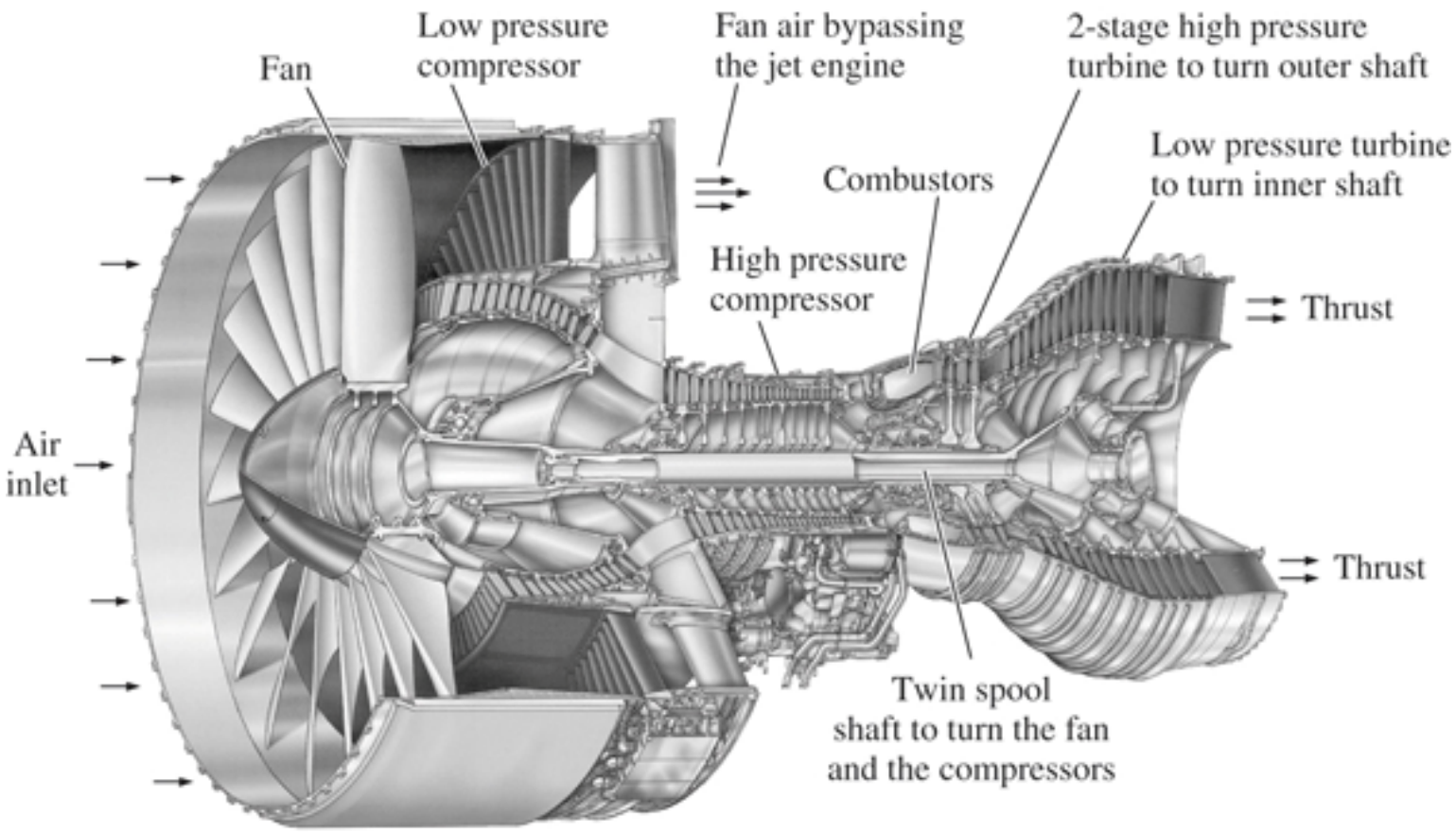

A modern jet engine used to power Boeing 777 aircraft. This is a Pratt & Whitney PW4084 turbofan capable of producing 374 kN of thrust. It is 4.87 m long, has a 2.84 m diameter fan, and it weighs 6800 kg.

Various engine types:
Turbofan, Propjet, Ramjet, Sacramjet, Rocket

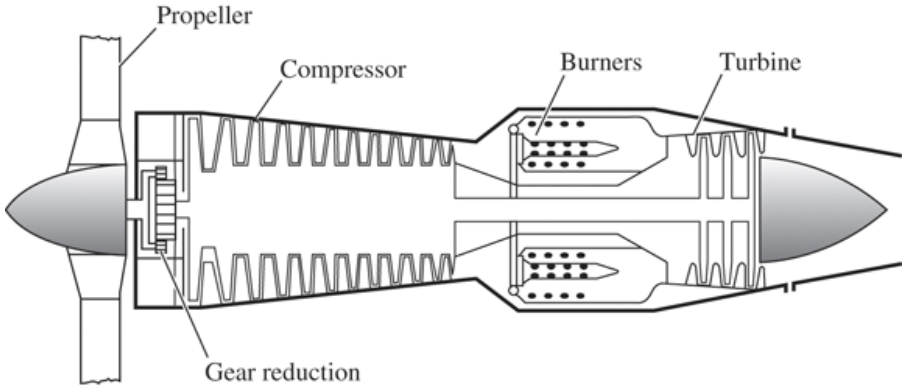

A turboprop engine.

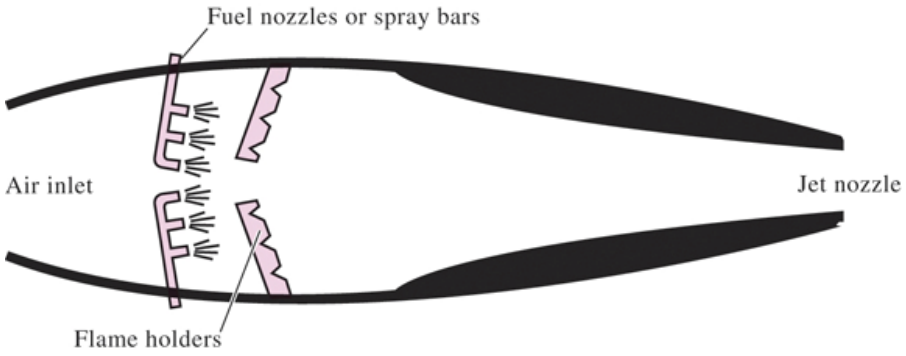

A ramjet engine.

SECOND-LAW ANALYSIS OF GAS POWER CYCLES

Exergy destruction for a closed system

$$X_{\text{dest}} = T_0 S_{\text{gen}} = T_0(\Delta S_{\text{sys}} - S_{\text{in}} + S_{\text{out}})$$
$$= T_0\left[(S_2 - S_1)_{\text{sys}} - \frac{Q_{\text{in}}}{T_{b,\,\text{in}}} + \frac{Q_{\text{out}}}{T_{b,\,\text{out}}}\right] \qquad (\text{kJ})$$

For a steady-flow system

$$\dot{X}_{\text{dest}} = T_0 \dot{S}_{\text{gen}} = T_0(\dot{S}_{\text{out}} - \dot{S}_{\text{in}}) = T_0\left(\sum \dot{m}_e s_e - \sum \dot{m}_i s_i - \frac{\dot{Q}_{\text{in}}}{T_{b,\,\text{in}}} + \frac{\dot{Q}_{\text{out}}}{T_{b,\,\text{out}}}\right)$$

Steady-flow, one-inlet, one-exit

$$X_{\text{dest}} = T_0 s_{\text{gen}} = T_0\left(s_e - s_i - \frac{q_{\text{in}}}{T_{b,\,\text{in}}} + \frac{q_{\text{out}}}{T_{b,\,\text{out}}}\right) \qquad (\text{kJ/kg})$$

Exergy destruction of a cycle

$$x_{\text{dest}} = T_0\left(\sum \frac{q_{\text{out}}}{T_{b,\,\text{out}}} - \sum \frac{q_{\text{in}}}{T_{b,\,\text{in}}}\right) \qquad (\text{kJ/kg})$$

For a cycle with heat transfer only with a source and a sink

$$x_{\text{dest}} = T_0\left(\frac{q_{\text{out}}}{T_L} - \frac{q_{\text{in}}}{T_H}\right) \qquad (\text{kJ/kg})$$

Closed system exergy

$$\phi = (u - u_0) - T_0(s - s_0) + P_0(v - v_0) + \frac{V^2}{2} + gz$$

Stream exergy

$$\psi = (h - h_0) - T_0(s - s_0) + \frac{V^2}{2} + gz \qquad (\text{kJ/kg})$$

A second-law analysis of these cycles reveals where the largest irreversibilities occur and where to start improvements.

SUMMARY

- Basic considerations in the analysis of power cycles
- The Carnot cycle and its value in engineering
- Air-standard asssumptions
- An overview of reciprocating engines
- Otto cycle: The ideal cycle for spark-ignition engines
- Diesel cycle: The ideal cycle for compression-ignition engines
- Stirling and Ericsson cycles
- Brayton cycle: The ideal cycle for gas-turbine engines
- The Brayton cycle with regeneration
- The Brayton cycle with intercooling, reheating, and regeneration
- Ideal jet-propulsion cycles
- Second-law analysis of gas power cycles

The world's largest turbine, with an output of 340 MW that a new combined cycle power plant achieves a record-breaking efficiency of more than 60 % when it goes into operation in 2011.

After assembly at Siemens' gas turbine plant in Berlin, the world's largest gas turbine hits the road. The turbine arrives on a flat bed trailer at its destination

EXAMPLE 9–16

A gas-turbine power plant operates on the simple Brayton cycle between the pressure limits of 100 and 1200kPa. The working fluid is air, which enters the compressor at 30°C at a rate of 150 m3/min and leaves the turbine at 500°C. Using variable specific heats for air and assuming a compressor isentropic efficiency of 82 percent and a turbine isentropic efficiency of 88 percent, determine (*a) the net power* output, (*b) the back work ratio, and (c) the thermal efficiency.*

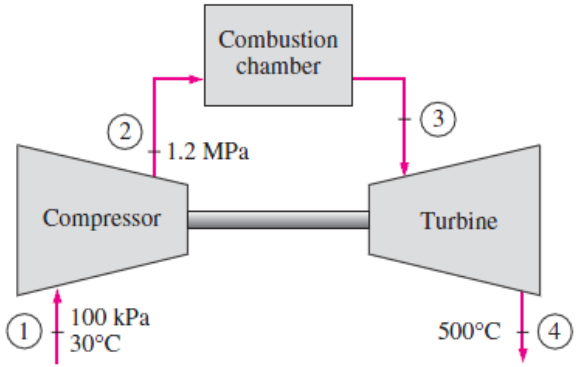

FIGURE P9–84

Assumptions 1 The air-standard assumptions are applicable. 2 Kinetic and potential energy changes are negligible. **3** Air is an ideal gas with variable specific heats.

Properties The gas constant of air is R = 0.287 kJ/kg·K (Table A-1).

Analysis (a) For this problem, we use the properties from EES software. Remember that for an ideal gas, enthalpy is a function of temperature only whereas entropy is a function of both temperature and pressure.

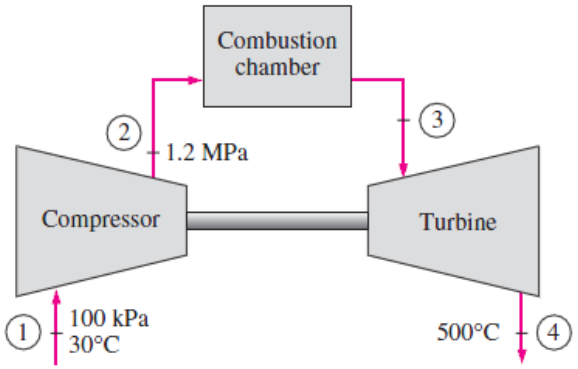

FIGURE P9–84

Process 1–2: compression.

$$T_1 = 30°\text{C} \longrightarrow h_1 = 303.60 \text{ kJ/kg}$$

$$\left.\begin{array}{l} T_1 = 30°\text{C} \\ P_1 = 100 \text{ kPa} \end{array}\right\} s_1 = 5.7159 \text{ kJ/kg} \cdot \text{K}$$

$$\left.\begin{array}{l} P_2 = 1200 \text{ kPa} \\ s_2 = s_1 = 5.7159 \text{ kJ/kg.K} \end{array}\right\} h_{2s} = 617.37 \text{ kJ/kg}$$

$$\eta_C = \frac{h_{2s} - h_1}{h_2 - h_1} \longrightarrow 0.82 = \frac{617.37 - 303.60}{h_2 - 303.60} \longrightarrow h_2 = 686.24 \text{ kJ/kg}$$

Process 3–4: expansion.

$$T_4 = 500°\text{C} \longrightarrow h_4 = 792.62 \text{ kJ/kg}$$

$$\eta_T = \frac{h_3 - h_4}{h_3 - h_{4s}} \longrightarrow 0.88 = \frac{h_3 - 792.62}{h_3 - h_{4s}}$$

We cannot find the enthalpy at state 3 directly. However, using the following lines in EES together with the isentropic efficiency relation, we find h_3 = 1404.7 kJ/kg, T_3 = 1034°C, s_3 = 6.5699 kJ/kg.K. The solution by hand would require a trial and error approach.

```
h_3=enthalpy(Air, T=T_3)
s_3=entropy(Air, T=T_3, P=P_2)
h_4s=enthalpy(Air, P=P_1, s=s_3)
```

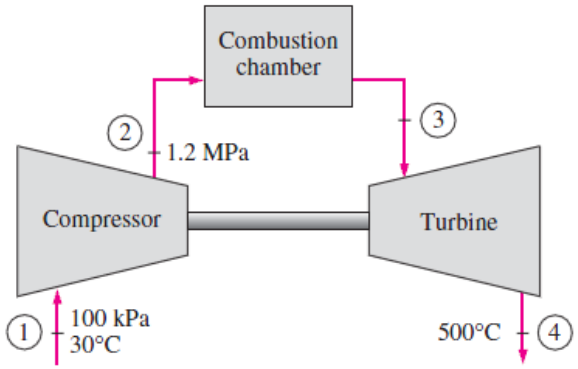

FIGURE P9–84

The mass flow rate is determined from

$$\dot{m} = \frac{P_1 \dot{V}_1}{RT_1} = \frac{(100\,\text{kPa})(150/60\,\text{m}^3/\text{s})}{(0.287\,\text{kPa}\cdot\text{m}^3/\text{kg}\cdot\text{K})(30+273\,\text{K})} = 2.875\,\text{kg/s}$$

The net power output is

$$\dot{W}_{\text{C,in}} = \dot{m}(h_2 - h_1) = (2.875\,\text{kg/s})(686.24 - 303.60)\text{kJ/kg} = 1100\,\text{kW}$$

$$\dot{W}_{\text{T,out}} = \dot{m}(h_3 - h_4) = (2.875\,\text{kg/s})(1404.7 - 792.62)\text{kJ/kg} = 1759\,\text{kW}$$

$$\dot{W}_{\text{net}} = \dot{W}_{\text{T,out}} - \dot{W}_{\text{C,in}} = 1759 - 1100 = \mathbf{659\,kW}$$

(b) The back work ratio is

$$r_{bw} = \frac{\dot{W}_{C,in}}{\dot{W}_{T,out}} = \frac{1100\,\text{kW}}{1759\,\text{kW}} = \mathbf{0.625}$$

(c) The rate of heat input and the thermal efficiency are

$$\dot{Q}_{in} = \dot{m}(h_3 - h_2) = (2.875\,\text{kg/s})(1404.7 - 686.24)\text{kJ/kg} = 2065\,\text{kW}$$

$$\eta_{th} = \frac{\dot{W}_{net}}{\dot{Q}_{in}} = \frac{659\,\text{kW}}{2065\,\text{kW}} = \mathbf{0.319}$$

EXAMPLE 9-25

A gas-turbine engine with regeneration operates with two stages of compression and two stages of expansion. The pressure ratio across each stage of the compressor and turbine is 3.5. The air enters each stage of the compressor at 300 K and each stage of the turbine at 1200 K. The compressor and turbine efficiencies are 78 and 86 percent, respectively, and the effectiveness of the regenerator is 72 percent. Determine the back work ratio and the thermal efficiency of the cycle, assuming constant specific heats for air at room temperature.

Assumptions 1 The air-standard assumptions are applicable.
2 Kinetic and potential energy changes are negligible.
3 Air is an ideal gas with constant specific heats.

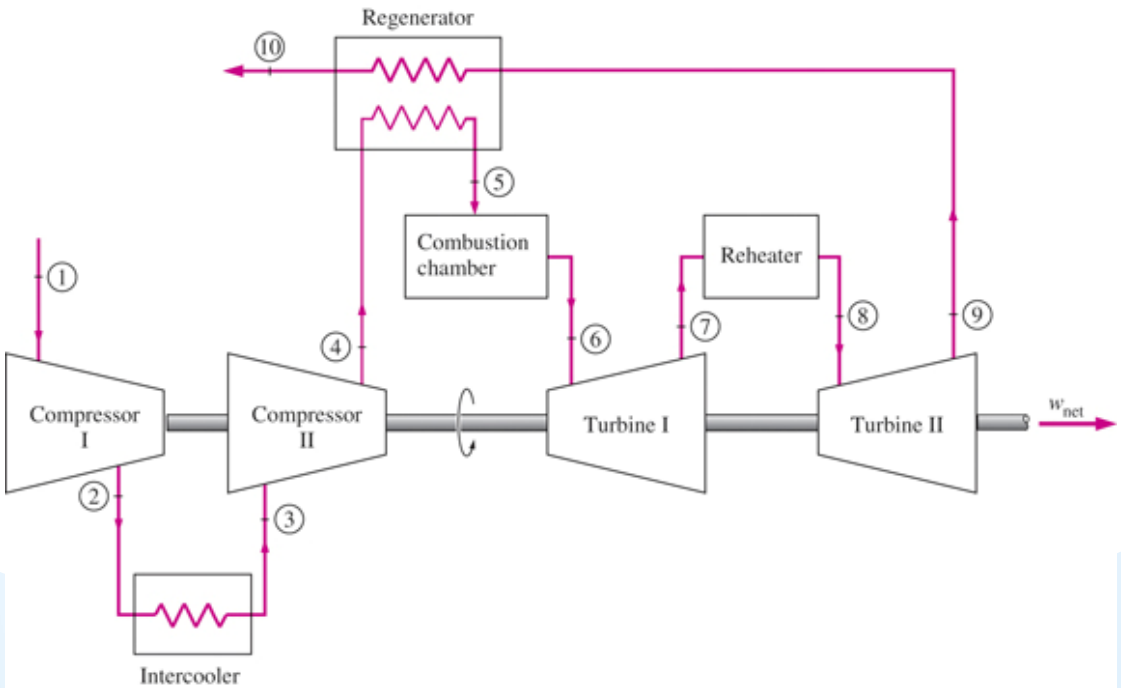

Analysis The work inputs of each stage of compressor are identical, so are the work outputs of each stage of the turbine.

$$T_{4s} = T_{2s} = T_1\left(\frac{P_2}{P_1}\right)^{(k-1)/k} = (300\text{ K})(3.5)^{0.4/1.4} = 429.1\text{ K}$$

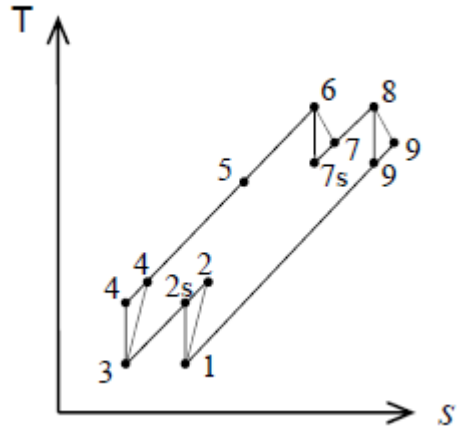

$$\eta_C = \frac{h_{2s} - h_1}{h_2 - h_1} = \frac{c_p(T_{2s} - T_1)}{c_p(T_2 - T_1)} \longrightarrow T_4 = T_2 = T_1 + (T_{2s} - T_1)/\eta_C$$

$$= 300 + (429.1 - 300)/(0.78)$$

$$= 465.5\text{ K}$$

$$T_{9s} = T_{7s} = T_6\left(\frac{P_7}{P_6}\right)^{(k-1)/k} = (1200\text{ K})\left(\frac{1}{3.5}\right)^{0.4/1.4} = 838.9\text{ K}$$

$$\eta_T = \frac{h_6 - h_7}{h_6 - h_{7s}} = \frac{c_p(T_6 - T_7)}{c_p(T_6 - T_{7s})} \longrightarrow T_9 = T_7 = T_6 - \eta_T(T_6 - T_{7s})$$

$$= 1200 - (0.86)(1200 - 838.9)$$

$$= 889.5\text{ K}$$

$$\varepsilon = \frac{h_5 - h_4}{h_9 - h_4} = \frac{c_p(T_5 - T_4)}{c_p(T_9 - T_4)} \longrightarrow T_5 = T_4 + \varepsilon(T_9 - T_4)$$
$$= 465.5 + (0.72)(889.5 - 465.5)$$
$$= 770.8 \text{ K}$$

$$w_{\text{C,in}} = 2(h_2 - h_1) = 2c_p(T_2 - T_1) = 2(1.005 \text{ kJ/kg}\cdot\text{K})(465.5 - 300)\text{K} = 332.7 \text{ kJ/kg}$$

$$w_{\text{T,out}} = 2(h_6 - h_7) = 2c_p(T_6 - T_7) = 2(1.005 \text{ kJ/kg}\cdot\text{K})(1200 - 889.5)\text{K} = 624.1 \text{ kJ/kg}$$

Thus, $r_{\text{bw}} = \dfrac{w_{\text{C,in}}}{w_{\text{T,out}}} = \dfrac{332.7 \text{ kJ/kg}}{624.1 \text{ kJ/kg}} = \mathbf{53.3\%}$

$$q_{\text{in}} = (h_6 - h_5) + (h_8 - h_7) = c_p[(T_6 - T_5) + (T_8 - T_7)]$$
$$= (1.005 \text{ kJ/kg}\cdot\text{K})[(1200 - 770.8) + (1200 - 889.5)]\text{K} = 743.4 \text{ kJ/kg}$$

$$w_{\text{net}} = w_{\text{T,out}} - w_{\text{C,in}} = 624.1 - 332.7 = 291.4 \text{ kJ/kg}$$

$$\eta_{\text{th}} = \frac{w_{\text{net}}}{q_{\text{in}}} = \frac{291.4 \text{ kJ/kg}}{743.4 \text{ kJ/kg}} = \mathbf{39.2\%}$$

Thermodynamics: An Engineering Approach, 5th Edition
Yunus A. Cengel, Michael A. Boles
McGraw-Hill, 2008

Chapter 10

VAPOR AND COMBINED POWER CYCLES

Prof. Dr. Ali PINARBAŞI
Yildiz Technical University
Mechanical Engineering Department
Yildiz, ISTANBUL

Objectives

- Evaluate the performance of gas power cycles for which the working fluid remains a gas throughout the entire cycle.
- Analyze vapor power cycles in which the working fluid is alternately vaporized and condensed.
- Analyze power generation coupled with process heating called *cogeneration*.
- Investigate ways to modify the basic Rankine vapor power cycle to increase the cycle thermal efficiency.
- Analyze the reheat and regenerative vapor power cycles.
- Analyze power cycles that consist of two separate cycles known as combined cycles and binary cycles.

THE CARNOT VAPOR CYCLE

The Carnot cycle is the most efficient cycle operating between two specified temperature limits but it is not a suitable model for power cycles. Because:

Process 1-2 Limiting the heat transfer processes to two-phase systems severely limits the maximum temperature that can be used in the cycle (374°C for water)

Process 2-3 The turbine cannot handle steam with a high moisture content because of the impingement of liquid droplets on the turbine blades causing erosion and wear.

Process 4-1 It is not practical to design a compressor that handles two phases.

The cycle in (b) is not suitable since it requires isentropic compression to extremely high pressures and isothermal heat transfer at variable pressures.

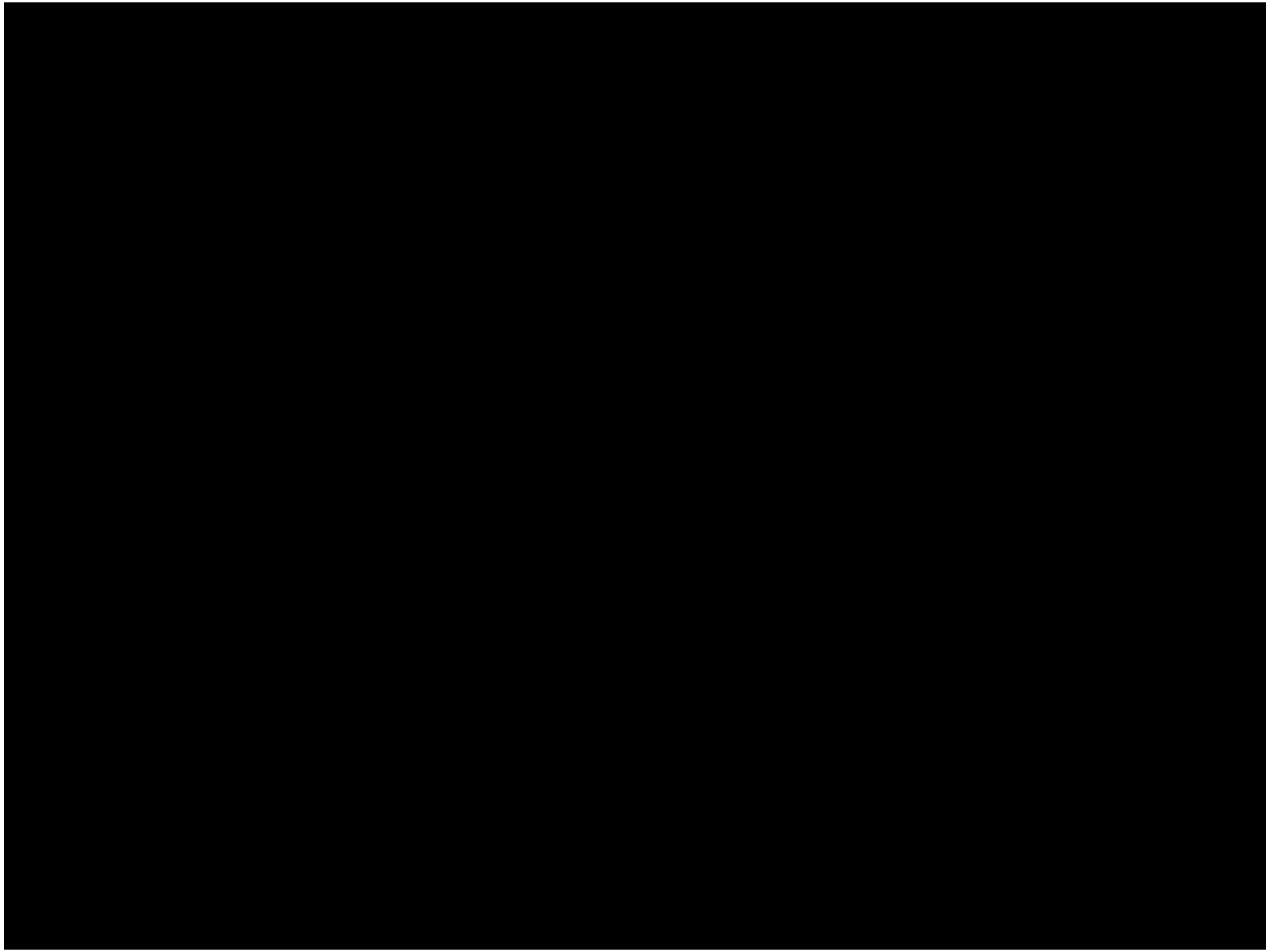

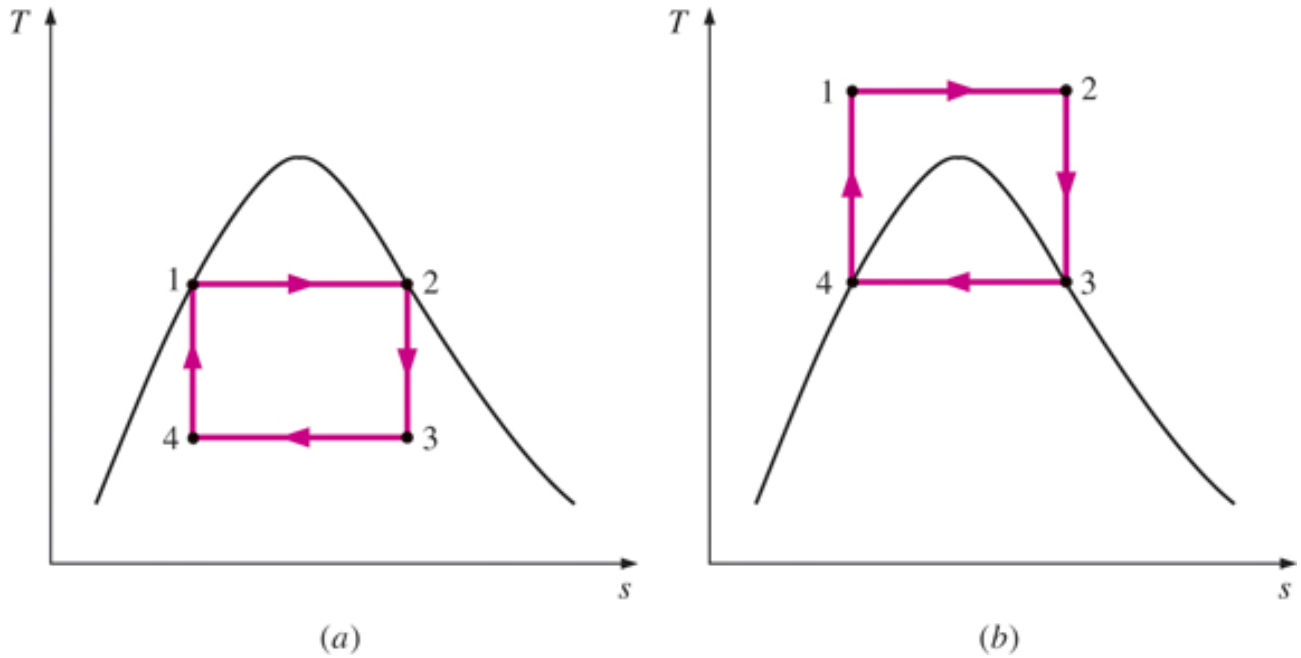

T-s diagram of two Carnot vapor cycles.

1-2 isothermal heat addition in a boiler
2-3 isentropic expansion in a turbine
3-4 isothermal heat rejection in a condenser
4-1 isentropic compression in a compressor

RANKINE CYCLE: THE IDEAL CYCLE FOR VAPOR POWER CYCLES

Many of the impracticalities associated with the Carnot cycle can be eliminated by superheating the steam in the boiler and condensing it completely in the condenser.

The cycle that results is the **Rankine cycle**, which is the ideal cycle for vapor power plants. The ideal Rankine cycle does not involve any internal irreversibilities.

1-2	Isentropic compression in a pump
2-3	Constant pressure heat addition in a boiler
3-4	Isentropic expansion in a turbine
4-1	Constant pressure heat rejection in a condenser

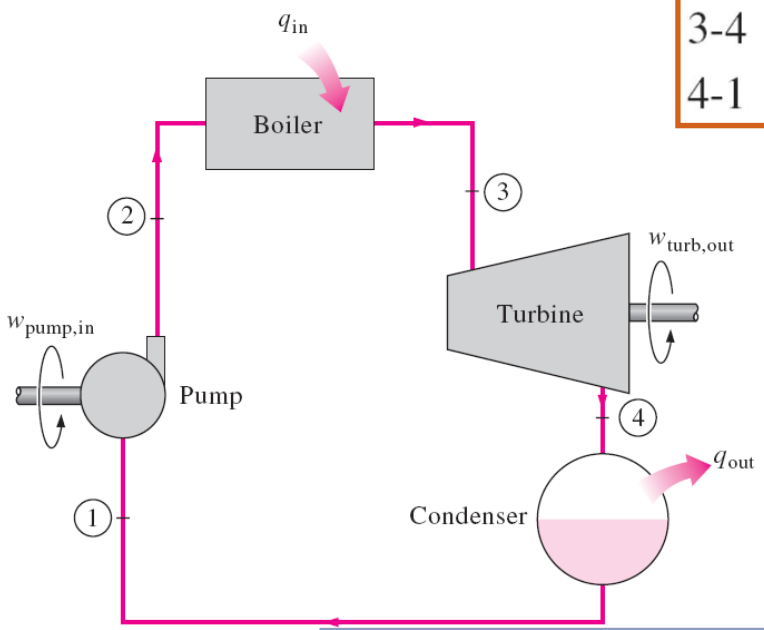

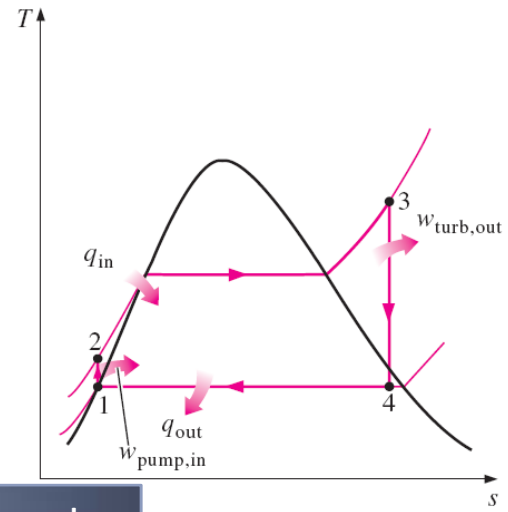

The simple ideal Rankine cycle.

Energy Analysis of the Ideal Rankine Cycle

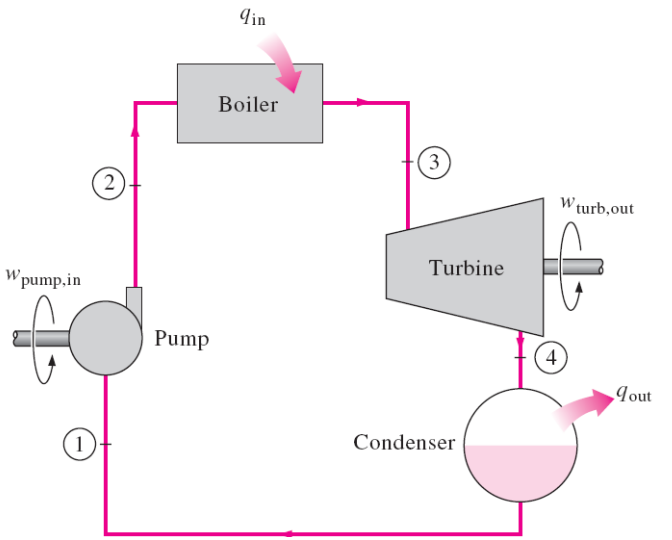

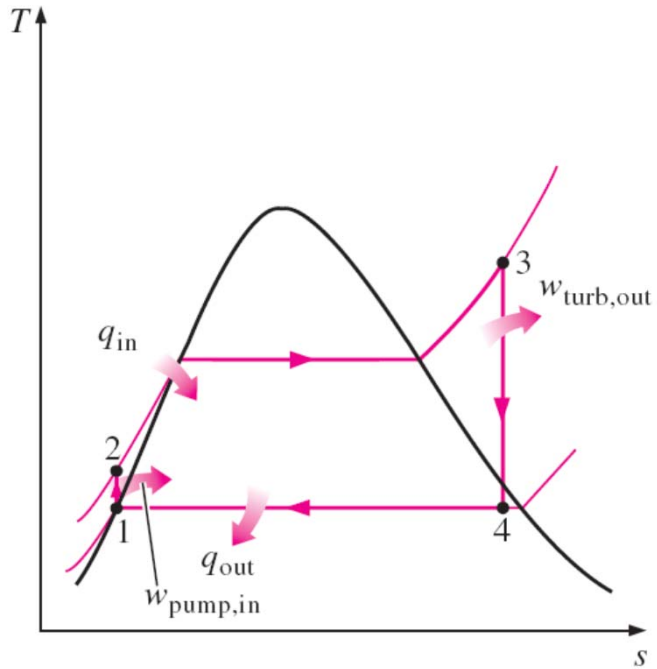

Steady-flow energy equation

$$(q_{in} - q_{out}) + (w_{in} - w_{out}) = h_e - h_i \qquad (\text{kJ/kg})$$

Pump ($q = 0$): $\quad w_{pump,\,in} = h_2 - h_1$

$$w_{pump,\,in} = v(P_2 - P_1)$$

$$h_1 = h_{f\,@\,P_1} \quad \text{and} \quad v \cong v_1 = v_{f\,@\,P_1}$$

Boiler ($w = 0$): $\quad q_{in} = h_3 - h_2$

Turbine ($q = 0$): $\quad w_{turb,\,out} = h_3 - h_4$

Condenser ($w = 0$): $\quad q_{out} = h_4 - h_1$

The efficiency of power plants in the U.S. is often expressed in terms of **heat rate**,

$$\eta_{th} = \frac{3412\ (\text{Btu/kWh})}{\text{Heat rate}\ (\text{Btu/kWh})}$$

$$w_{net} = q_{in} - q_{out} = w_{turb,\ out} - w_{pump,\ in}$$

The thermal efficiency can be interpreted as the ratio of the area enclosed by the cycle on a *T-s* diagram to the area under the heat-addition process.

$$\boxed{\eta_{th} = \frac{w_{net}}{q_{in}} = 1 - \frac{q_{out}}{q_{in}}}$$

EXAMPLE 10–1

Consider a steam power plant operating on the simple ideal Rankine cycle. The steam enters the turbine at 3 MPa and 350°C and is condensed in the condenser at a pressure of 75 kPa. Determine the thermal efficiency of this cycle.

Solution A steam power plant operating on the simple ideal Rankine cycle is considered. The thermal efficiency of the cycle is to be determined.

Assumptions **1** Steady operating conditions exist. **2** Kinetic and potential energy changes are negligible.

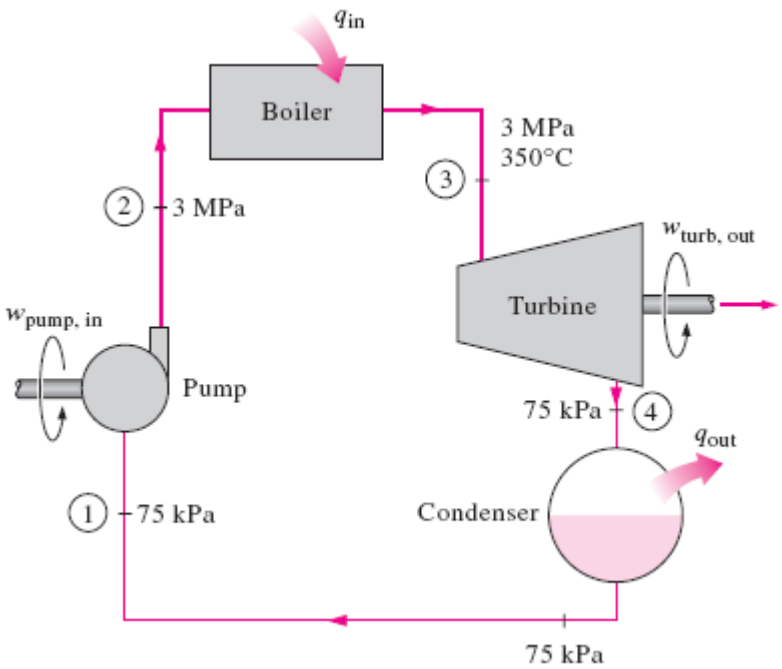

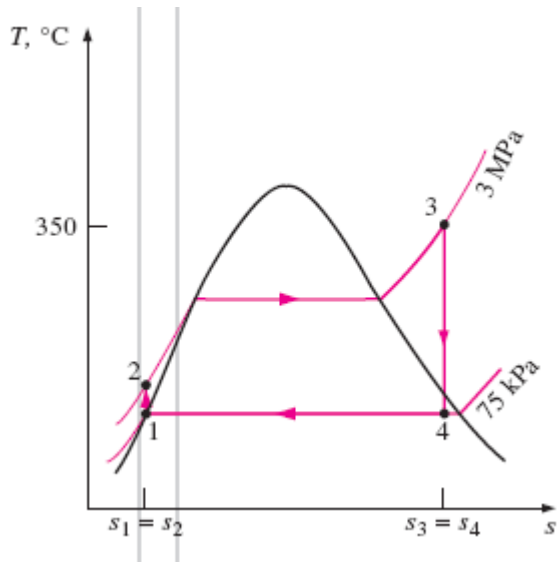

State 1: $P_1 = 75\ \text{kPa}$, Sat. liquid $\Big\}$ $h_1 = h_{f\ @\ 75\ \text{kPa}} = 384.44\ \text{kJ/kg}$, $v_1 = v_{f\ @\ 75\ \text{kPa}} = 0.001037\ \text{m}^3/\text{kg}$

State 2: $P_2 = 3\ \text{MPa}$, $s_2 = s_1$

$$w_{\text{pump, in}} = v_1(P_2 - P_1) = (0.001037\ \text{m}^3/\text{kg})[(3000 - 75)\ \text{kPa}]\left(\frac{1\ \text{kJ}}{1\ \text{kPa}\cdot\text{m}^3}\right) = 3.03\ \text{kJ/kg}$$

$$h_2 = h_1 + w_{\text{pump, in}} = (384.44 + 3.03)\ \text{kJ/kg} = 387.47\ \text{kJ/kg}$$

State 3: $P_3 = 3\ \text{MPa}$, $T_3 = 350°\text{C}$ $\Big\}$ $h_3 = 3116.1\ \text{kJ/kg}$, $s_3 = 6.7450\ \text{kJ/kg}\cdot\text{K}$

State 4: $P_4 = 75\ \text{kPa}$ (sat. mixture) $s_4 = s_3$

$$x_4 = \frac{s_4 - s_f}{s_{fg}} = \frac{6.7450 - 1.2132}{6.2426} = 0.8861$$

$$h_4 = h_f + x_4 h_{fg} = 384.44 + 0.8861(2278.0) = 2403.0\ \text{kJ/kg}$$

$$q_{\text{in}} = h_3 - h_2 = (3116.1 - 387.47)\ \text{kJ/kg} = 2728.6\ \text{kJ/kg}$$

$$q_{\text{out}} = h_4 - h_1 = (2403.0 - 384.44)\ \text{kJ/kg} = 2018.6\ \text{kJ/kg}$$

$$\eta_{th} = 1 - \frac{q_{out}}{q_{in}} = 1 - \frac{2018.6 \text{ kJ/kg}}{2728.6 \text{ kJ/kg}} = \mathbf{0.260 \text{ or } 26.0\%}$$

$$w_{turb,\,out} = h_3 - h_4 = (3116.1 - 2403.0) \text{ kJ/kg} = 713.1 \text{ kJ/kg}$$

$$w_{net} = w_{turb,\,out} - w_{pump,\,in} = (713.1 - 3.03) \text{ kJ/kg} = 710.1 \text{ kJ/kg}$$

$$w_{net} = q_{in} - q_{out} = (2728.6 - 2018.6) \text{ kJ/kg} = 710.0 \text{ kJ/kg}$$

$$\eta_{th} = \frac{w_{net}}{q_{in}} = \frac{710.0 \text{ kJ/kg}}{2728.6 \text{ kJ/kg}} = \mathbf{0.260 \text{ or } 26.0\%}$$

That is, this power plant converts 26 % of the heat it receives in the boiler to net work. An actual power plant operating between the same temperature and pressure limits will have a lower efficiency because of the irreversibilities such as friction.

Discussion Notice that the back work ratio ($r_{pw} = w_{in}/w_{out}$) of this power plant is 0.004, and thus only 0.4 % of the turbine work output is required to operate the pump. Having such low back work ratios is characteristic of vapor power cycles. This is in contrast to the gas power cycles, which typically have very high back work ratios (about 40 to 80 %). It is also interesting to note the thermal efficiency of a Carnot cycle operating between the same temperature limits

$$\eta_{th,\,Carnot} = 1 - \frac{T_{min}}{T_{max}} = 1 - \frac{(91.76 + 273) \text{ K}}{(350 + 273) \text{ K}} = 0.415$$

DEVIATION OF ACTUAL VAPOR POWER CYCLES FROM IDEALIZED ONES

The actual vapor power cycle differs from the ideal Rankine cycle as a result of irreversibilities in various components.

Fluid friction and heat loss to the surroundings are the two common sources of irreversibilities.

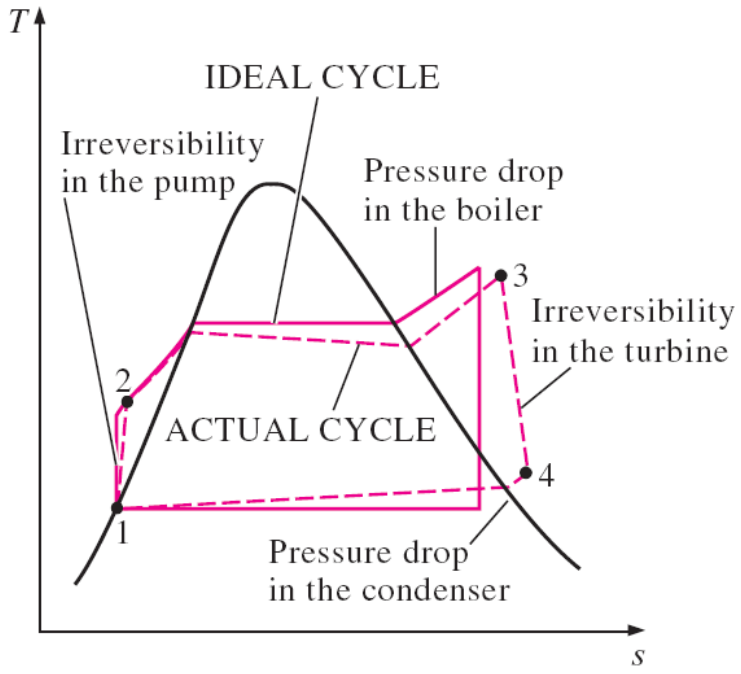

(a)

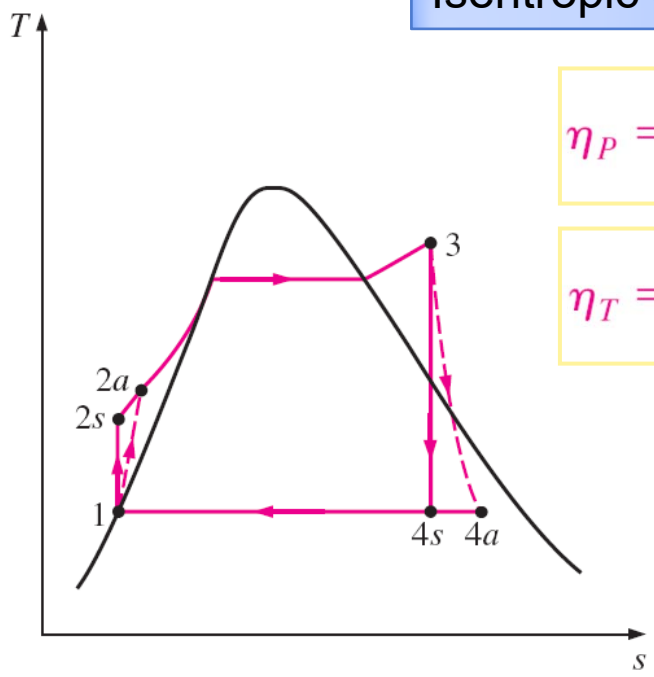

(b)

Isentropic efficiencies

$$\eta_P = \frac{w_s}{w_a} = \frac{h_{2s} - h_1}{h_{2a} - h_1}$$

$$\eta_T = \frac{w_a}{w_s} = \frac{h_3 - h_{4a}}{h_3 - h_{4s}}$$

(a) Deviation of actual vapor power cycle from the ideal Rankine cycle.
(b) The effect of pump and turbine irreversibilities on the ideal Rankine cycle.

EXAMPLE 10–2

A steam power plant operates on the cycle shown in Figure. If the isentropic efficiency of the turbine is 87 % and the isentropic efficiency of the pump is 85 %, determine (*a*) the thermal efficiency of the cycle and (*b*) the net power output of the plant for a mass flow rate of 15 kg/s.

Solution A steam power cycle with specified turbine and pump efficiencies is considered. The thermal efficiency and the net power output are to be determined.

Assumptions **1** Steady operating conditions exist. **2** Kinetic and potential energy changes are negligible.

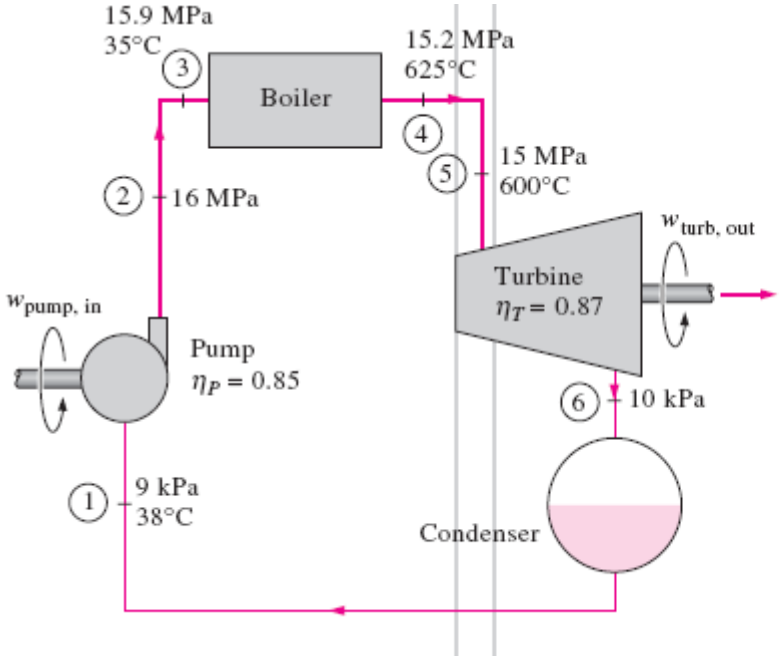

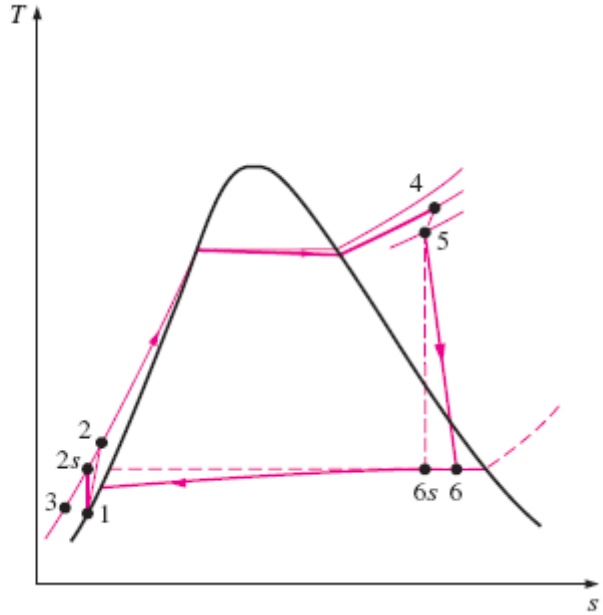

(*a*) The thermal efficiency of a cycle;

Pump work input:

$$w_{\text{pump, in}} = \frac{w_{s,\text{ pump, in}}}{\eta_p} = \frac{v_1(P_2 - P_1)}{\eta_p}$$

$$= \frac{(0.001009\ \text{m}^3/\text{kg})[(16{,}000 - 9)\ \text{kPa}]}{0.85}\left(\frac{1\ \text{kJ}}{1\ \text{kPa}\cdot\text{m}^3}\right) = 19.0\ \text{kJ/kg}$$

Turbine work output:

$$w_{\text{turb, out}} = \eta_T w_{s,\text{ turb, out}}$$

$$= \eta_T(h_5 - h_{6s}) = 0.87(3583.1 - 2115.3)\ \text{kJ/kg} = 1277.0\ \text{kJ/kg}$$

Boiler heat input:

$$q_{\text{in}} = h_4 - h_3 = (3647.6 - 160.1)\ \text{kJ/kg} = 3487.5\ \text{kJ/kg}$$

$$w_{\text{net}} = w_{\text{turb, out}} - w_{\text{pump, in}} = (1277.0 - 19.0)\ \text{kJ/kg} = 1258.0\ \text{kJ/kg}$$

$$\eta_{\text{th}} = \frac{w_{\text{net}}}{q_{\text{in}}} = \frac{1258.0\ \text{kJ/kg}}{3487.5\ \text{kJ/kg}} = \mathbf{0.361\ or\ 36.1\%}$$

(*b*) The power produced by this power plant is

HOW CAN WE INCREASE THE EFFICIENCY OF THE RANKINE CYCLE?

The basic idea behind all the modifications to increase the thermal efficiency of a power cycle is the same: *Increase the average temperature at which heat is transferred to the working fluid in the boiler, or decrease the average temperature at which heat is rejected from the working fluid in the condenser.*

Lowering the Condenser Pressure (*Lowers* $T_{low,avg}$)

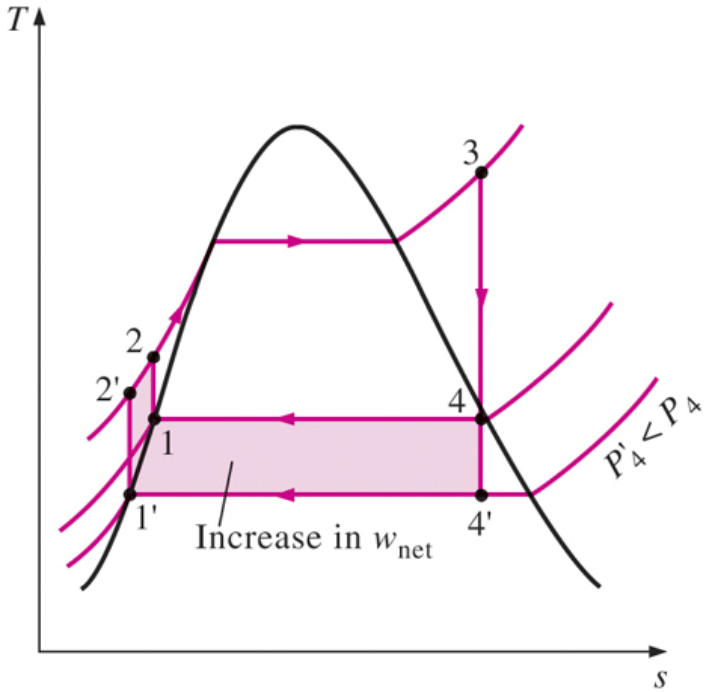

The effect of lowering the condenser pressure on the ideal Rankine cycle.

To take advantage of the increased efficiencies at low pressures, the condensers of steam power plants usually operate well below the atmospheric pressure. There is a lower limit to this pressure depending on the temperature of the cooling medium

Side effect: Lowering the condenser pressure increases the moisture content of the steam at the final stages of the turbine.

Superheating the Steam to High Temperatures (*Increases* $T_{high,avg}$)

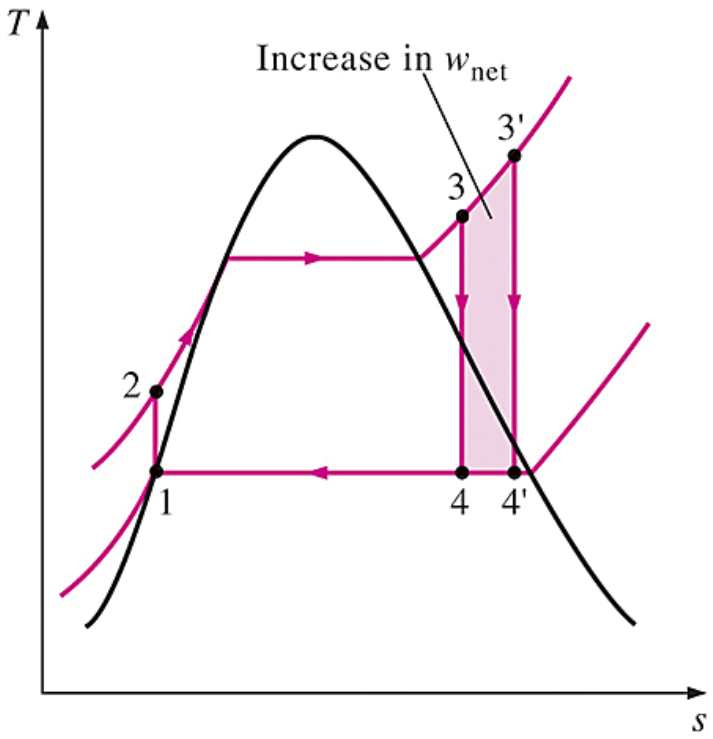

The effect of superheating the steam to higher temperatures on the ideal Rankine cycle.

Both the net work and heat input increase as a result of superheating the steam to a higher temperature. The overall effect is an increase in thermal efficiency since the average temperature at which heat is added increases.

Superheating to higher temperatures decreases the moisture content of the steam at the turbine exit, which is desirable.

The temperature is limited by metallurgical considerations. Presently the highest steam temperature allowed at the turbine inlet is about 620°C.

Increasing the Boiler Pressure (Increases $T_{high,avg}$)

For a fixed turbine inlet temperature, the cycle shifts to the left and the moisture content of steam at the turbine exit increases. This side effect can be corrected by reheating the steam.

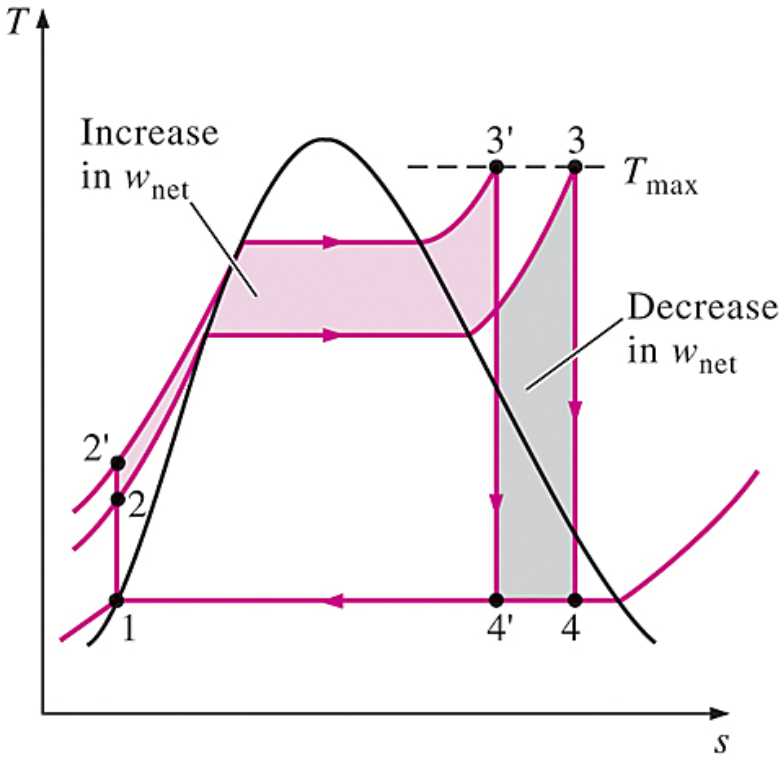

The effect of increasing the boiler pressure on the ideal Rankine cycle.

Today many modern steam power plants operate at supercritical pressures (P > 22.06 MPa) and have thermal efficiencies of about 40% for fossil-fuel plants and 34% for nuclear plants.

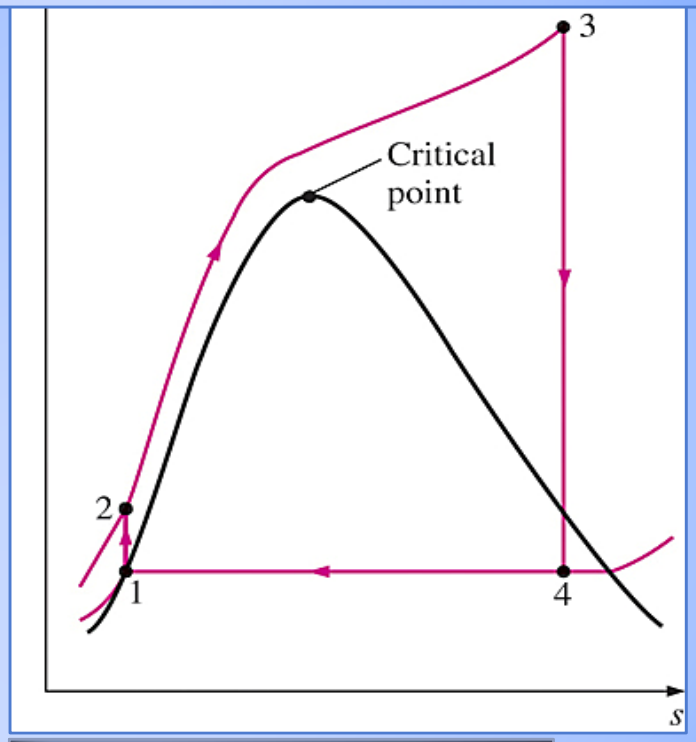

A supercritical Rankine cycle.

Rankine Cycles (*Increases* $T_{high,avg}$)

EXAMPLE 10–3

Consider a steam power plant operating on the ideal Rankine cycle. The steam enters the turbine at 3 MPa and 350°C and is condensed in the condenser at a pressure of 10 kPa. Determine (*a*) the thermal efficiency of this power plant, (*b*) the thermal efficiency if steam is superheated to 600°C instead of 350°C, and (*c*) the thermal efficiency if the boiler pressure is raised to 15 MPa while the turbine inlet temperature is maintained at 600°C.

(*a*) The thermal efficiency is determined in a similar manner:

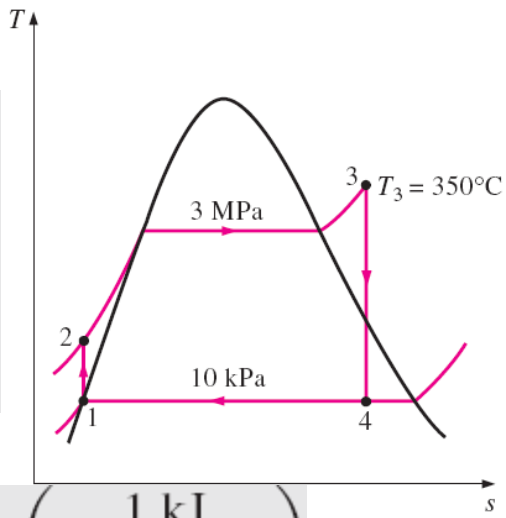

State 1: $P_1 = 10$ kPa, Sat. liquid $\Big\}$ $h_1 = h_{f\ @\ 10\,\text{kPa}} = 191.81$ kJ/kg, $v_1 = v_{f\ @\ 10\,\text{kPa}} = 0.00101$ m³/kg

State 2: $P_2 = 3$ MPa, $s_2 = s_1$

$$w_{\text{pump, in}} = \mathbf{v}_1(P_2 - P_1) = (0.00101\ \text{m}^3/\text{kg})[(3000 - 10)\ \text{kPa}]\left(\frac{1\ \text{kJ}}{1\ \text{kPa}\cdot\text{m}^3}\right)$$

$$= 3.02\ \text{kJ/kg}$$

$$h_2 = h_1 + w_{\text{pump, in}} = (191.81 + 3.02)\ \text{kJ/kg} = 194.83\ \text{kJ/kg}$$

State 3: $P_3 = 3$ MPa, $T_3 = 350°C$ $\Big\}$ $h_3 = 3116.1$ kJ/kg, $s_3 = 6.7450$ kJ/kg·K

State 4: $P_4 = 10 \text{ kPa}$ (sat. mixture)

$$s_4 = s_3$$

$$x_4 = \frac{s_4 - s_f}{s_{fg}} = \frac{6.7450 - 0.6492}{7.4996} = 0.8128$$

$$h_4 = h_f + x_4 h_{fg} = 191.81 + 0.8128(2392.1) = 2136.1 \text{ kJ/kg}$$

$$q_{in} = h_3 - h_2 = (3116.1 - 194.83) \text{ kJ/kg} = 2921.3 \text{ kJ/kg}$$

$$q_{out} = h_4 - h_1 = (2136.1 - 191.81) \text{ kJ/kg} = 1944.3 \text{ kJ/kg}$$

$$\eta_{th} = 1 - \frac{q_{out}}{q_{in}} = 1 - \frac{1944.3 \text{ kJ/kg}}{2921.3 \text{ kJ/kg}} = \mathbf{0.334 \text{ or } 33.4\%}$$

Therefore, the thermal efficiency increases from 26.0 to 33.4 percent as a result of lowering the condenser pressure from 75 to 10 kPa. At the same time, however, the quality of the steam decreases from 88.6 to 81.3 percent (in other words, the moisture content increases from 11.4 to 18.7 percent).

(*b*) States 1 and 2 remain the same in this case, and the enthalpies at state 3 (3 MPa and 600°C) and state 4 (10 kPa and s_4=s_3) are determined to be

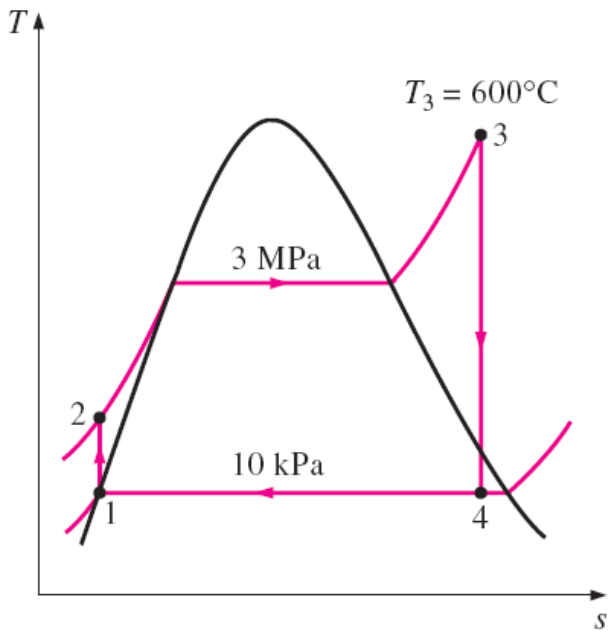

$$h_3 = 3682.8 \text{ kJ/kg}$$

$$h_4 = 2380.3 \text{ kJ/kg} \quad (x_4 = 0.915)$$

$$q_{in} = h_3 - h_2 = 3682.8 - 194.83 = 3488.0 \text{ kJ/kg}$$

$$q_{out} = h_4 - h_1 = 2380.3 - 191.81 = 2188.5 \text{ kJ/kg}$$

$$\eta_{th} = 1 - \frac{q_{out}}{q_{in}} = 1 - \frac{2188.5 \text{ kJ/kg}}{3488.0 \text{ kJ/kg}} = \mathbf{0.373 \text{ or } 37.3\%}$$

Therefore, the thermal efficiency increases from 33.4 to 37.3 percent as a result of superheating the steam from 350 to 600°C. At the same time, the quality of the steam increases from 81.3 to 91.5 percent (in other words, the moisture content decreases from 18.7 to 8.5 percent).

(*c*) State 1 remains the same in this case, but the other states change. The enthalpies at state 2 (15 MPa and $s_2=s_1$), state 3 (15 MPa and 600°C), and state 4 (10 kPa and $s_4=s_3$) are determined in a similar manner to be

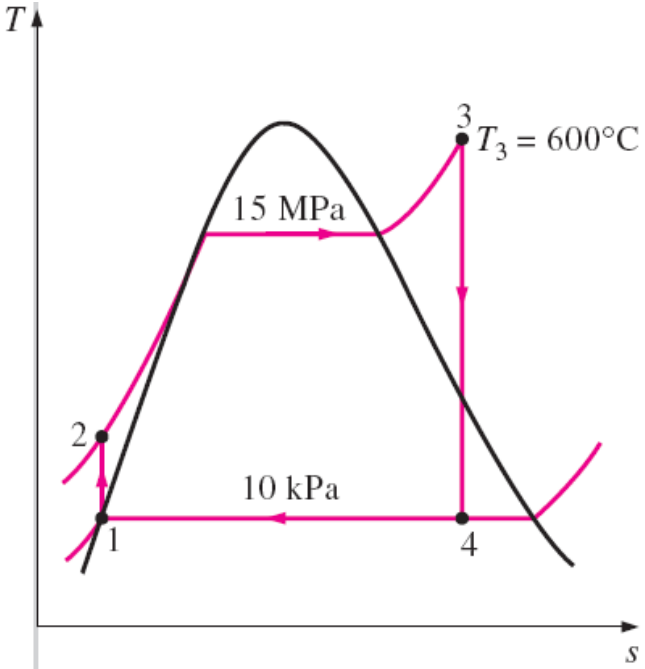

$$h_2 = 206.95 \text{ kJ/kg}$$
$$h_3 = 3583.1 \text{ kJ/kg}$$
$$h_4 = 2115.3 \text{ kJ/kg} \qquad (x_4 = 0.804)$$

$$q_{in} = h_3 - h_2 = 3583.1 - 206.95 = 3376.2 \text{ kJ/kg}$$
$$q_{out} = h_4 - h_1 = 2115.3 - 191.81 = 1923.5 \text{ kJ/kg}$$

$$\eta_{th} = 1 - \frac{q_{out}}{q_{in}} = 1 - \frac{1923.5 \text{ kJ/kg}}{3376.2 \text{ kJ/kg}} = \mathbf{0.430 \text{ or } 43.0\%}$$

Discussion The thermal efficiency increases from 37.3 to 43.0 percent as a result of raising the boiler pressure from 3 to 15 MPa while maintaining the turbine inlet temperature at 600°C. At the same time, however, the quality of the steam decreases from 91.5 to 80.4 % (in other words, the moisture content increases from 8.5 to 19.6 %).

THE IDEAL REHEAT RANKINE CYCLE

How can we take advantage of the increased efficiencies at higher boiler pressures without facing the problem of excessive moisture at the final stages of the turbine?

1. Superheat the steam to very high temperatures. It is limited metallurgically.
2. Expand the steam in the turbine in two stages, and reheat it in between (**reheat**)

$$q_{in} = q_{primary} + q_{reheat} = (h_3 - h_2) + (h_5 - h_4)$$

$$w_{turb,\,out} = w_{turb,\,I} + w_{turb,\,II} = (h_3 - h_4) + (h_5 - h_6)$$

The ideal reheat Rankine cycle.

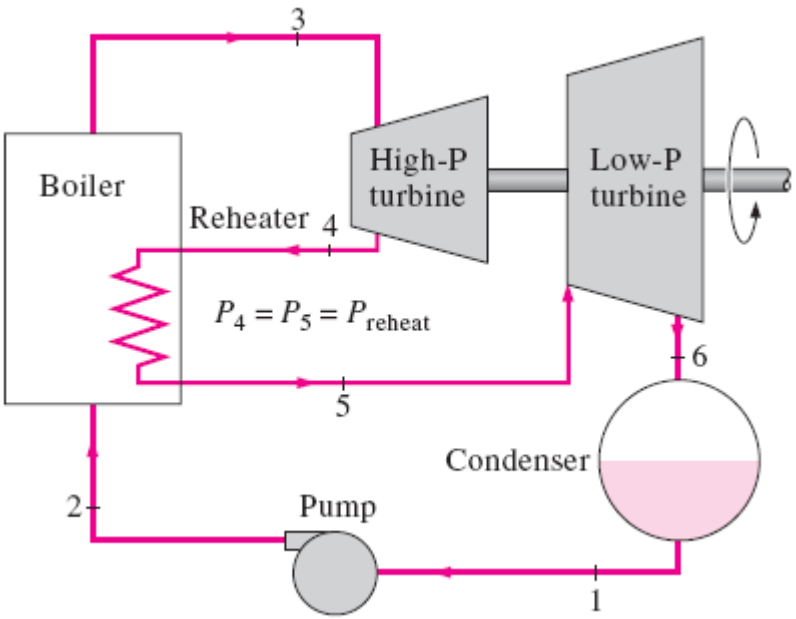

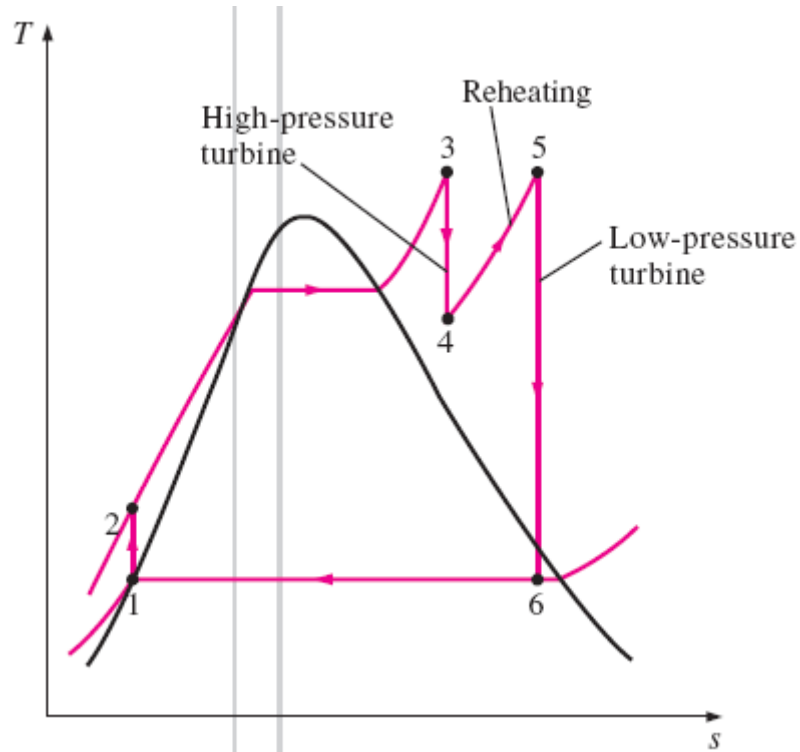

The single reheat in a modern power plant improves the cycle efficiency by 4 to 5% by increasing the average temperature at which heat is transferred to the steam.

The average temperature during the reheat process can be increased by increasing the number of expansion and reheat stages. As the number of stages is increased, the expansion and reheat processes approach an isothermal process at the maximum temperature. The use of more than two reheat stages is not practical. The theoretical improvement in efficiency from the second reheat is about half of that which results from a single reheat.

The reheat temperatures are very close or equal to the turbine inlet temperature.

The optimum reheat pressure is about one-fourth of the maximum cycle pressure.

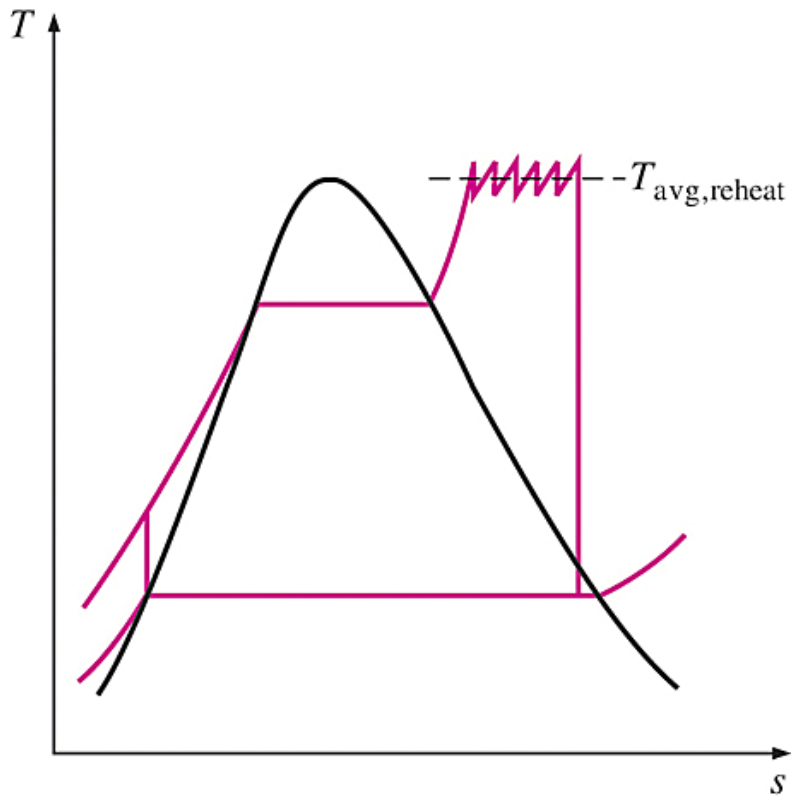

The average temperature at which heat is transferred during reheating increases as the number of reheat stages is increased.

Rankine Cycles (*the ideal reheat rankine cycle*)

EXAMPLE 10–4

Consider a steam power plant operating on the ideal reheat Rankine cycle. Steam enters the high-pressure turbine at 15 MPa and 600°C and is condensed in the condenser at a pressure of 10 kPa. If the moisture content of the steam at the exit of the low-pressure turbine is not to exceed 10.4 percent, determine (*a*) the pressure at which the steam should be reheated and (*b*) the thermal efficiency of the cycle. Assume the steam is reheated to the inlet temperature of the high-pressure turbine.

Solution A steam power plant operating on the ideal reheat Rankine cycle is considered. For a specified moisture content at the turbine exit, the reheat pressure and the thermal efficiency are to be determined.

Assumptions **1** Steady operating conditions exist. **2** Kinetic and potential energy changes are negligible.

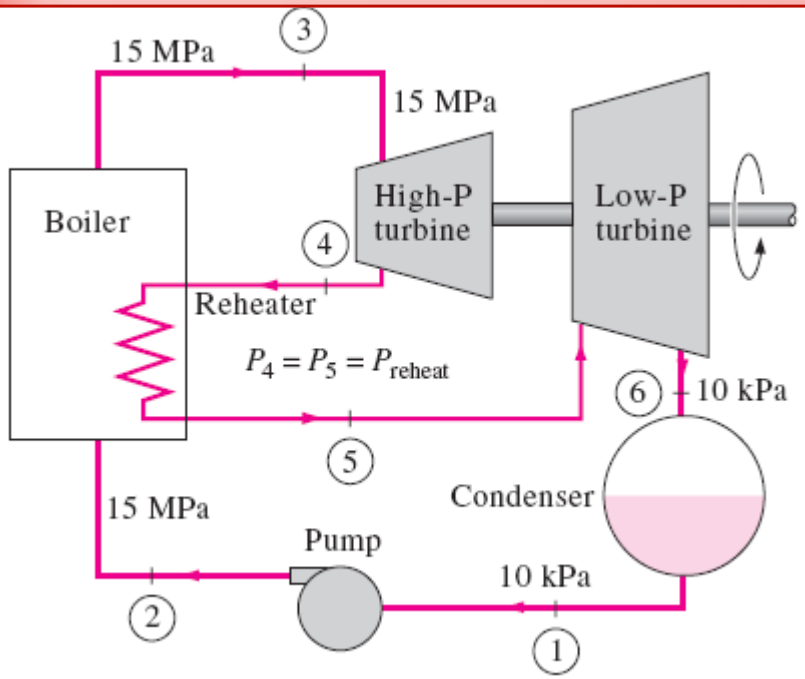

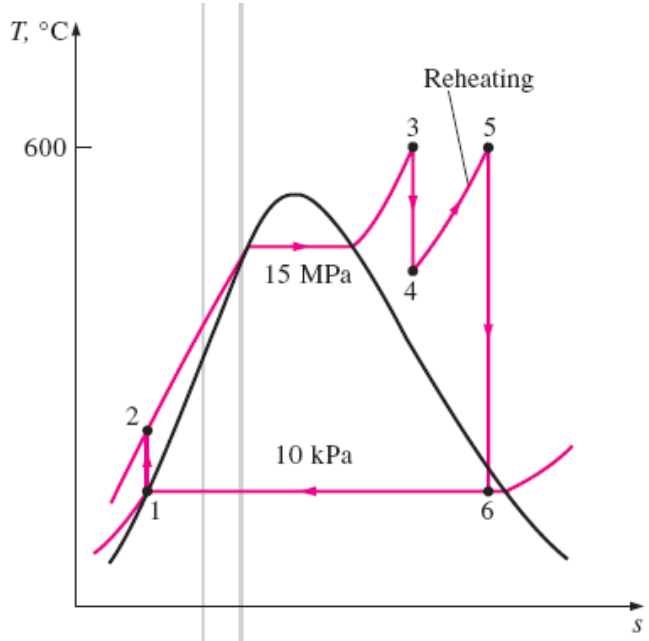

(*a*) The reheat pressure is determined from the requirement that the entropies at states 5 and 6 be the same:

State 6: $P_6 = 10 \text{ kPa}$

$x_6 = 0.896 \quad \text{(sat. mixture)}$

$s_6 = s_f + x_6 s_{fg} = 0.6492 + 0.896(7.4996) = 7.3688 \text{ kJ/kg} \cdot \text{K}$

$$h_6 = h_f + x_6 h_{fg} = 191.81 + 0.896(2392.1) = 2335.1 \text{ kJ/kg}$$

State 5: $\left.\begin{array}{l} T_5 = 600°\text{C} \\ s_5 = s_6 \end{array}\right\} \quad \begin{array}{l} P_5 = \mathbf{4.0\ MPa} \\ h_5 = 3674.9 \text{ kJ/kg} \end{array}$

Therefore, steam should be reheated at a pressure of 4 MPa or lower to prevent a moisture content above 10.4 percent.

(*b*) To determine the thermal efficiency, we need to know the enthalpies at all other states:

State 1: $P_1 = 10\ \text{kPa}$, Sat. liquid $\Big\}$ $h_1 = h_{f\,@\,10\,\text{kPa}} = 191.81\ \text{kJ/kg}$, $v_1 = v_{f\,@\,10\,\text{kPa}} = 0.00101\ \text{m}^3/\text{kg}$

State 2: $P_2 = 15\ \text{MPa}$, $s_2 = s_1$

$$w_{\text{pump, in}} = v_1(P_2 - P_1) = (0.00101\ \text{m}^3/\text{kg}) \times [(15{,}000 - 10)\text{kPa}]\left(\frac{1\ \text{kJ}}{1\ \text{kPa}\cdot\text{m}^3}\right) = 15.14\ \text{kJ/kg}$$

$$h_2 = h_1 + w_{\text{pump, in}} = (191.81 + 15.14)\ \text{kJ/kg} = 206.95\ \text{kJ/kg}$$

State 3: $P_3 = 15\ \text{MPa}$, $T_3 = 600°\text{C}$ $\Big\}$ $h_3 = 3583.1\ \text{kJ/kg}$, $s_3 = 6.6796\ \text{kJ/kg}\cdot\text{K}$

State 4: $P_4 = 4\ \text{MPa}$, $s_4 = s_3$ $\Big\}$ $h_4 = 3155.0\ \text{kJ/kg}$ $(T_4 = 375.5°\text{C})$

$$q_{in} = (h_3 - h_2) + (h_5 - h_4)$$
$$= (3583.1 - 206.95)\ \text{kJ/kg} + (3674.9 - 3155.0)\ \text{kJ/kg}$$
$$= 3896.1\ \text{kJ/kg}$$
$$q_{out} = h_6 - h_1 = (2335.1 - 191.81)\ \text{kJ/kg}$$
$$= 2143.3\ \text{kJ/kg}$$

$$\eta_{th} = 1 - \frac{q_{out}}{q_{in}} = 1 - \frac{2143.3\ \text{kJ/kg}}{3896.1\ \text{kJ/kg}} = \mathbf{0.450\ or\ 45.0\%}$$

Discussion This problem was solved in Example 10–3*c* for the same pressure and temperature limits but without the reheat process. A comparison of the two results reveals that reheating reduces the moisture content from 19.6 to 10.4 percent while increasing the thermal efficiency from 43.0 to 45.0 percent.

THE IDEAL REGENERATIVE RANKINE CYCLE

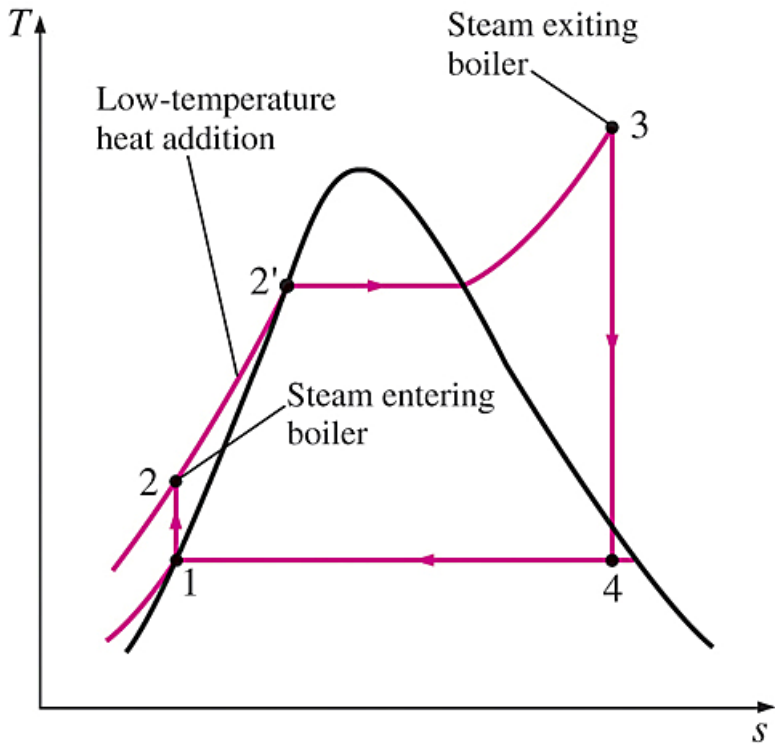

The first part of the heat-addition process in the boiler takes place at relatively low temperatures.

Heat is transferred to the working fluid during process 2-2 at a relatively low temperature. This lowers the average heat-addition temperature and thus the cycle efficiency.

In steam power plants, steam is extracted from the turbine at various points. This steam, which could have produced more work by expanding further in the turbine, is used to heat the feedwater instead. The device where the feedwater is heated by regeneration is called a **regenerator**, or a **feedwater heater (FWH)**.

A feedwater heater is basically a heat exchanger where heat is transferred from the steam to the feedwater either by mixing the two fluid streams (open feedwater heaters) or without mixing them (closed feedwater heaters).

Open Feedwater Heaters

An **open** (or **direct-contact**) **feedwater heater** is basically a *mixing chamber,* where the steam extracted from the turbine mixes with the feedwater exiting the pump. Ideally, the mixture leaves the heater as a saturated liquid at the heater pressure.

$$q_{in} = h_5 - h_4$$

$$q_{out} = (1 - y)(h_7 - h_1)$$

$$w_{turb,\,out} = (h_5 - h_6) + (1 - y)(h_6 - h_7)$$

$$w_{pump,\,in} = (1 - y)w_{pump\,I,\,in} + w_{pump\,II,\,in}$$

fraction of steam extracted

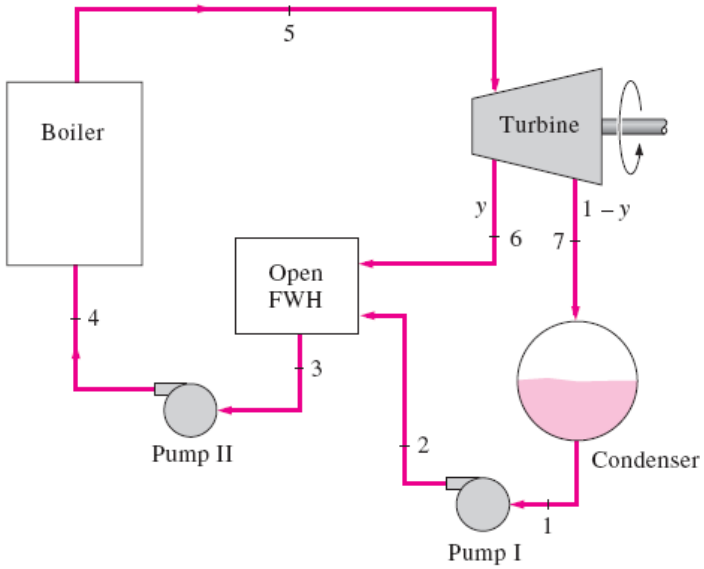

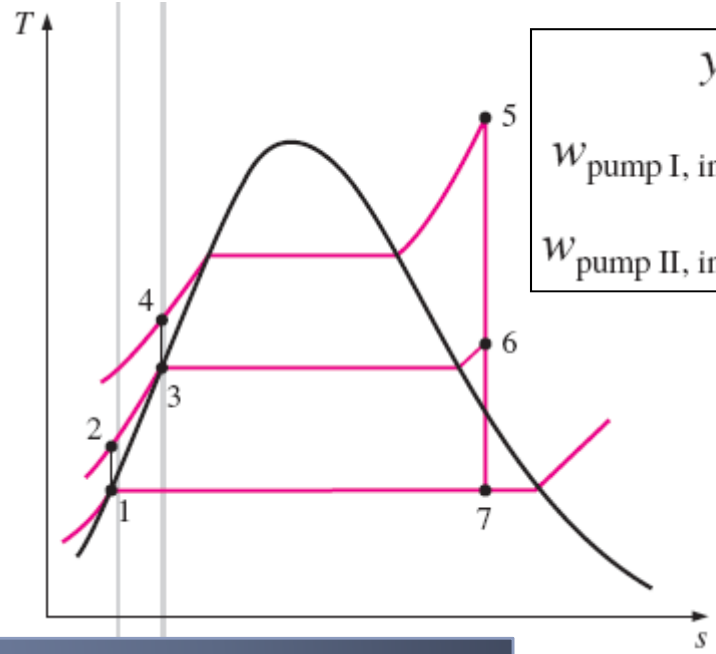

$$y = \dot{m}_6/\dot{m}_5$$

$$w_{pump\,I,\,in} = v_1(P_2 - P_1)$$

$$w_{pump\,II,\,in} = v_3(P_4 - P_3)$$

The ideal regenerative Rankine cycle with an open feedwater heater.

Rankine Cycles (Open Feedwater Heaters)

Closed Feedwater Heaters

Another type of feedwater heater frequently used in steam power plants is the **closed feedwater heater**, in which heat is transferred from the extracted steam to the feedwater without any mixing taking place. The two streams now can be at different pressures, since they do not mix.

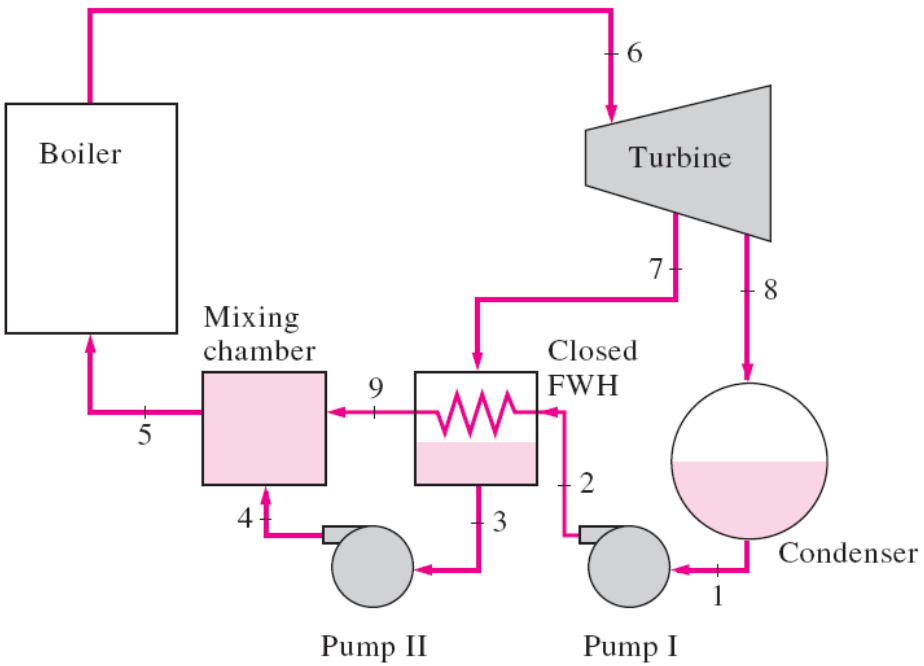

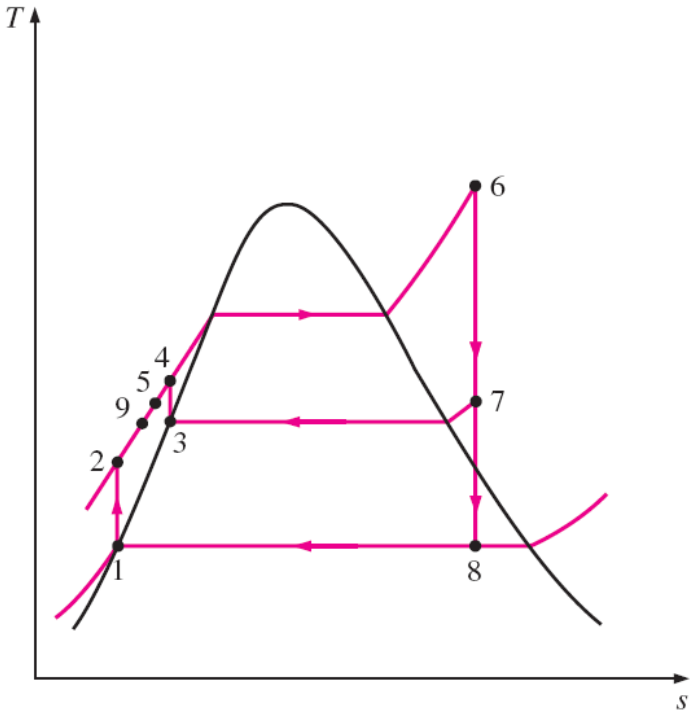

The ideal regenerative Rankine cycle with a closed feedwater heater.

The closed feedwater heaters are more complex because of the internal tubing network, and thus they are more expensive. Heat transfer in closed feedwater heaters is less effective since the two streams are not allowed to be in direct contact. However, closed feedwater heaters do not require a separate pump for each heater since the extracted steam and the feedwater can be at different pressures.

A steam power plant with one open and three closed feedwater heaters.

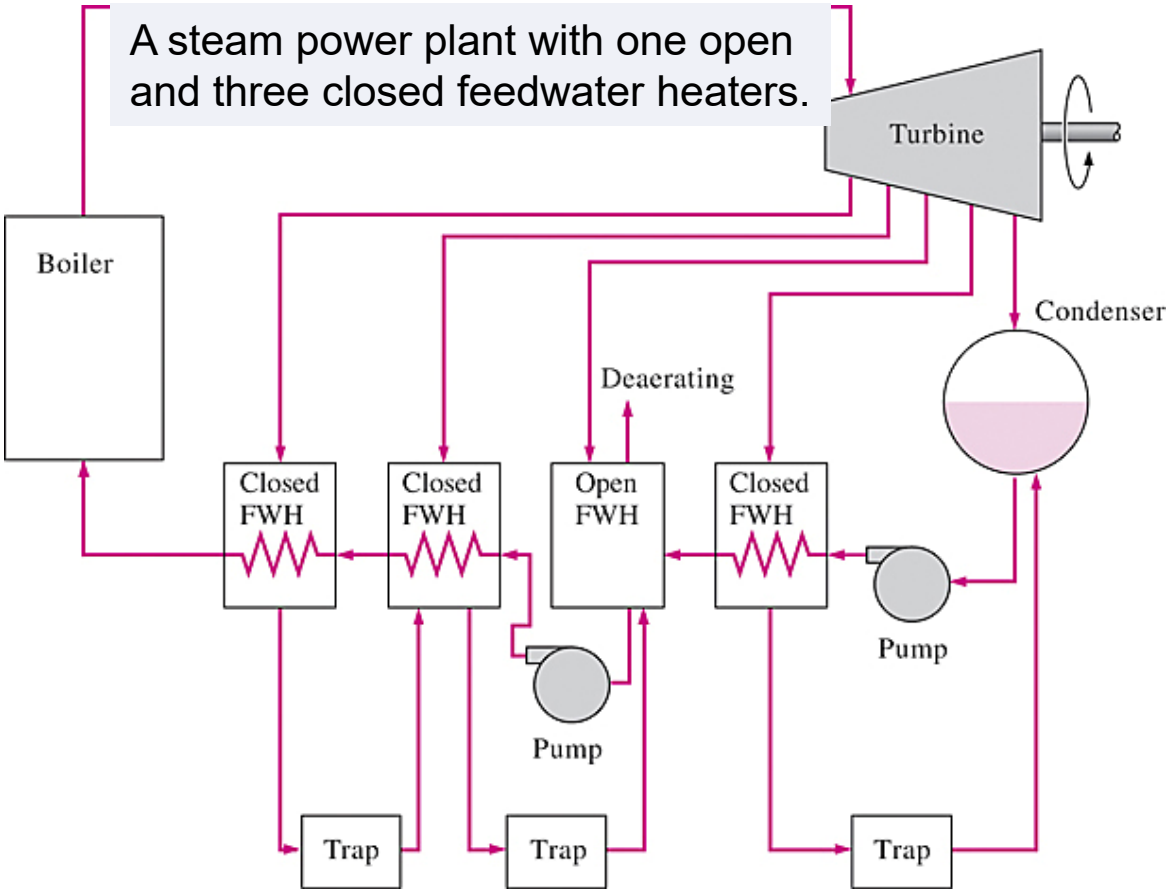

Open feedwater heaters are simple and inexpensive and have good heat transfer characteristics. For each heater, however, a pump is required to handle the feedwater.

Most steam power plants use a combination of open and closed feedwater heaters.

EXAMPLE 10–5

Consider a steam power plant operating on the ideal regenerative Rankine cycle with one open feedwater heater. Steam enters the turbine at 15 Mpa and 600°C and is condensed in the condenser at a pressure of 10 kPa. Some steam leaves the turbine at a pressure of 1.2 MPa and enters the open feedwater heater. Determine the fraction of steam extracted from the turbine and the thermal efficiency of the cycle.

Solution A steam power plant operates on the ideal regenerative Rankine cycle with one open feedwater heater. The fraction of steam extracted from the turbine and the thermal efficiency are to be determined.

Assumptions **1** Steady operating conditions exist. **2** Kinetic and potential energy changes are negligible.

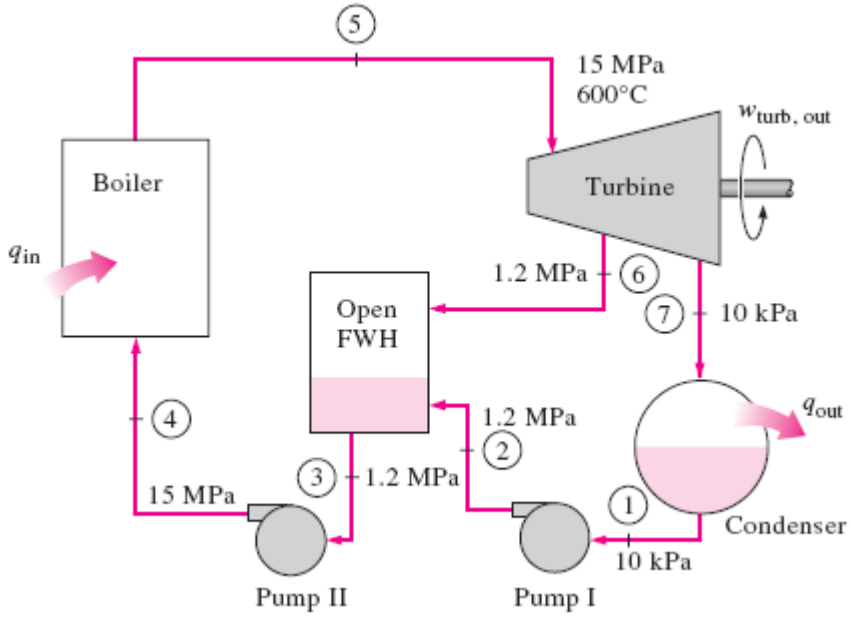

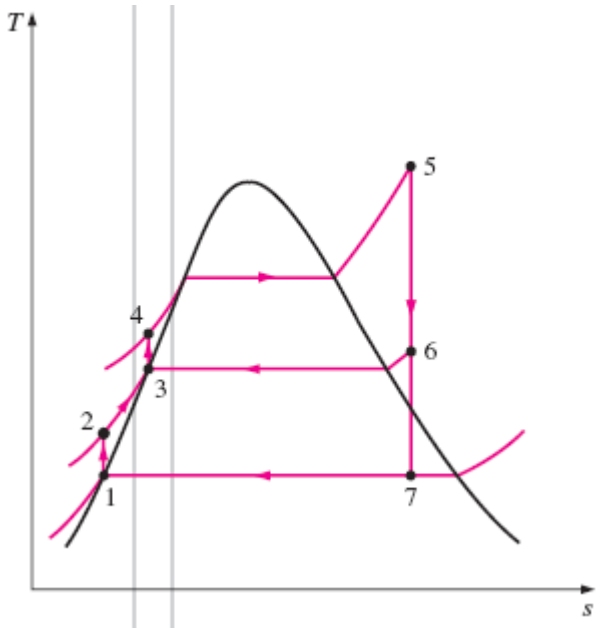

State 1: $P_1 = 10\ \text{kPa}$, Sat. liquid $\Big\}$ $h_1 = h_{f\ @\ 10\ \text{kPa}} = 191.81\ \text{kJ/kg}$, $v_1 = v_{f\ @\ 10\ \text{kPa}} = 0.00101\ \text{m}^3/\text{kg}$

State 2: $P_2 = 1.2\ \text{MPa}$

$$s_2 = s_1$$

$$w_{\text{pump I, in}} = v_1(P_2 - P_1) = (0.00101\ \text{m}^3/\text{kg})[(1200 - 10)\ \text{kPa}]\left(\frac{1\ \text{kJ}}{1\ \text{kPa}\cdot\text{m}^3}\right)$$

$$= 1.20\ \text{kJ/kg}$$

$$h_2 = h_1 + w_{\text{pump I, in}} = (191.81 + 1.20)\ \text{kJ/kg} = 193.01\ \text{kJ/kg}$$

State 3: $P_3 = 1.2\ \text{MPa}$, Sat. liquid $\Big\}$ $v_3 = v_{f\ @\ 1.2\ \text{MPa}} = 0.001138\ \text{m}^3/\text{kg}$, $h_3 = h_{f\ @\ 1.2\ \text{MPa}} = 798.33\ \text{kJ/kg}$

State 4: $P_4 = 15\ \text{MPa}$

$$s_4 = s_3$$

$$w_{\text{pump II, in}} = v_3(P_4 - P_3)$$

$$= (0.001138\ \text{m}^3/\text{kg})[(15{,}000 - 1200)\ \text{kPa}]\left(\frac{1\ \text{kJ}}{1\ \text{kPa}\cdot\text{m}^3}\right) = 15.70\ \text{kJ/kg}$$

$$h_4 = h_3 + w_{\text{pump II, in}} = (798.33 + 15.70)\ \text{kJ/kg} = 814.03\ \text{kJ/kg}$$

$$\textit{State 5:}\quad \left.\begin{aligned} P_5 &= 15\ \text{MPa} \\ T_5 &= 600°\text{C} \end{aligned}\right\} \quad \begin{aligned} h_5 &= 3583.1\ \text{kJ/kg} \\ s_5 &= 6.6796\ \text{kJ/kg}\cdot\text{K} \end{aligned}$$

$$\textit{State 6:}\quad \left.\begin{aligned} P_6 &= 1.2\ \text{MPa} \\ s_6 &= s_5 \end{aligned}\right\} \quad \begin{aligned} h_6 &= 2860.2\ \text{kJ/kg} \\ (T_6 &= 218.4°\text{C}) \end{aligned}$$

$$\textit{State 7:}\quad P_7 = 10\ \text{kPa}$$

$$s_7 = s_5 \qquad x_7 = \frac{s_7 - s_f}{s_{fg}} = \frac{6.6796 - 0.6492}{7.4996} = 0.8041$$

$$h_7 = h_f + x_7 h_{fg} = 191.81 + 0.8041(2392.1) = 2115.3\ \text{kJ/kg}$$

The energy analysis of open feedwater heaters is identical to the energy analysis of mixing chambers. The feedwater heaters are generally well insulated (*Q*=0), and they do not involve any work interactions (*W*=0). By neglecting the kinetic and potential energies of the streams, the energy balance reduces for a feedwater heater to

$$\dot{E}_{\text{in}} = \dot{E}_{\text{out}}$$

$$\sum \dot{m}_i h_i = \sum \dot{m}_e h_e$$

$$y h_6 + (1 - y) h_2 = 1(h_3)$$

where *y* is the fraction of steam extracted from the turbine (=$\dot{m}_6/\dot{m}_5$). Solving for *y* and substituting the enthalpy values, we find

$$y = \frac{h_3 - h_2}{h_6 - h_2} = \frac{798.33 - 193.01}{2860.2 - 193.01} = \mathbf{0.2270}$$

$$q_{in} = h_5 - h_4 = (3583.1 - 814.03)\ \text{kJ/kg} = 2769.1\ \text{kJ/kg}$$

$$q_{out} = (1 - y)(h_7 - h_1) = (1 - 0.2270)(2115.3 - 191.81)\ \text{kJ/kg}$$

$$= 1486.9\ \text{kJ/kg}$$

$$\eta_{th} = 1 - \frac{q_{out}}{q_{in}} = 1 - \frac{1486.9\ \text{kJ/kg}}{2769.1\ \text{kJ/kg}} = \mathbf{0.463\ or\ 46.3\%}$$

Discussion This problem was worked out in Example 10–3*c* for the same pressure and temperature limits but without the regeneration process. A comparison of the two results reveals that the thermal efficiency of the cycle has increased from 43.0 to 46.3 percent as a result of regeneration. The net work output decreased by 171 kJ/kg, but the heat input decreased by 607 kJ/kg, which results in a net increase in the thermal efficiency.

EXAMPLE 10–6

Consider a steam power plant that operates on an ideal reheat–regenerative Rankine cycle with one open feedwater heater, one closed feedwater heater, and one reheater. Steam enters the turbine at 15 MPa and 600°C and is condensed in the condenser at a pressure of 10 kPa. Some steam is extracted from the turbine at 4 MPa for the closed feedwater heater, and the remaining steam is reheated at the same pressure to 600°C. The extracted steam is completely condensed in the heater and is pumped to 15 Mpa before it mixes with the feedwater at the same pressure. Steam for the open feedwater heater is extracted from the low-pressure turbine at a pressure of 0.5 MPa. Determine the fractions of steam extracted from the turbine as well as the thermal efficiency of the cycle.

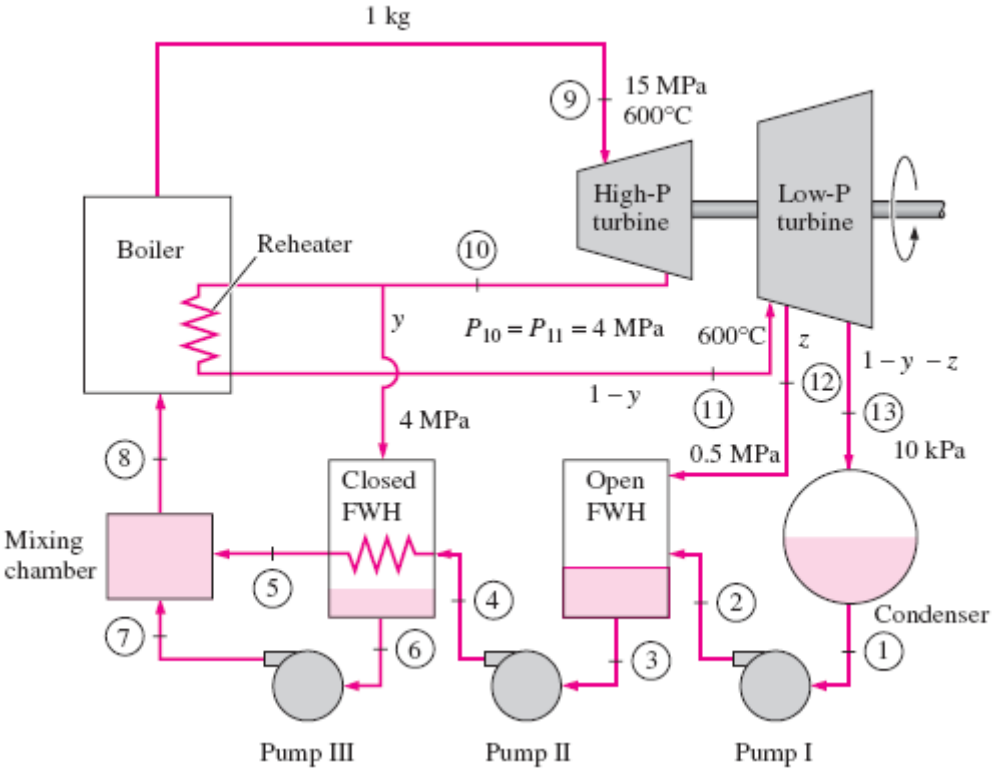

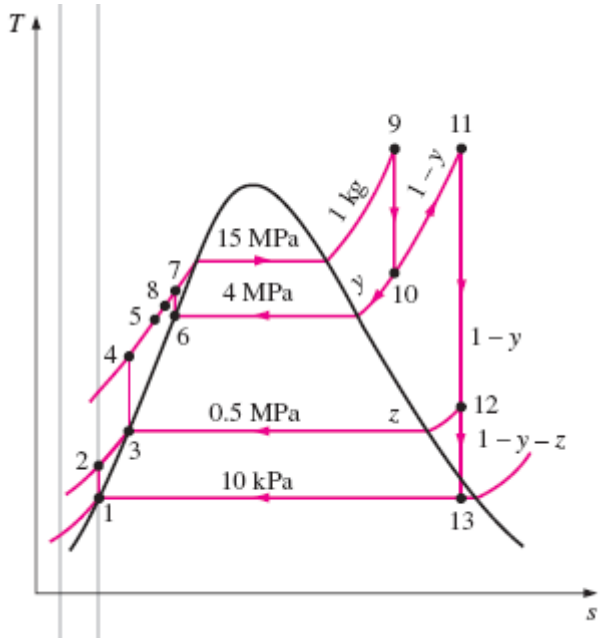

Solution A steam power plant operates on an ideal reheat–regenerative Rankine cycle with one open feedwater heater, one closed feedwater heater, and one reheater. The fraction of steam extracted from the turbine and the thermal efficiency are to be determined.

Assumptions **1** Steady operating conditions exist. **2** Kinetic and potential energy changes are negligible.

$h_1 = 191.81$ kJ/kg	$h_3 = 640.09$ kJ/kg
$h_2 = 192.30$ kJ/kg	$h_4 = 643.92$ kJ/kg
$h_5 = 1087.4$ kJ/kg	$h_{11} = 3674.9$ kJ/kg
$h_6 = 1087.4$ kJ/kg	$h_{12} = 3014.8$ kJ/kg
$h_7 = 1101.2$ kJ/kg	$h_{13} = 2335.7$ kJ/kg
$h_8 = 1089.8$ kJ/kg	$w_{\text{pump I, in}} = 0.49$ kJ/kg
$h_9 = 3583.1$ kJ/kg	$w_{\text{pump II, in}} = 3.83$ kJ/kg
$h_{10} = 3155.0$ kJ/kg	$w_{\text{pump III, in}} = 13.77$ kJ/kg

The fractions of steam extracted are determined from the mass and energy balances of the feedwater heaters:

Closed feedwater heater:

$$\dot{E}_{in} = \dot{E}_{out}$$

$$yh_{10} + (1 - y)h_4 = (1 - y)h_5 + yh_6$$

$$y = \frac{h_5 - h_4}{(h_{10} - h_6) + (h_5 - h_4)} = \frac{1087.4 - 643.92}{(3155.0 - 1087.4) + (1087.4 - 643.92)} = \mathbf{0.1766}$$

Open feedwater heater:

$$\dot{E}_{in} = \dot{E}_{out}$$

$$zh_{12} + (1 - y - z)h_2 = (1 - y)h_3$$

$$z = \frac{(1 - y)(h_3 - h_2)}{h_{12} - h_2} = \frac{(1 - 0.1766)(640.09 - 192.30)}{3014.8 - 192.30} = \mathbf{0.1306}$$

The enthalpy at state 8 is determined by applying the conservation of mass and energy equations to the mixing chamber, which is assumed to be insulated:

$$\dot{E}_{in} = \dot{E}_{out}$$

$$(1)h_8 = (1 - y)h_5 + yh_7$$

$$h_8 = (1 - 0.1766)(1087.4)\ \text{kJ/kg} + 0.1766(1101.2)\ \text{kJ/kg}$$

$$= 1089.8\ \text{kJ/kg}$$

$$q_{in} = (h_9 - h_8) + (1 - y)(h_{11} - h_{10})$$
$$= (3583.1 - 1089.8)\ \text{kJ/kg} + (1 - 0.1766)(3674.9 - 3155.0)\ \text{kJ/kg}$$
$$= 2921.4\ \text{kJ/kg}$$

$$q_{out} = (1 - y - z)(h_{13} - h_1)$$
$$= (1 - 0.1766 - 0.1306)(2335.7 - 191.81)\ \text{kJ/kg} = 1485.3\ \text{kJ/kg}$$

$$\eta_{th} = 1 - \frac{q_{out}}{q_{in}} = 1 - \frac{1485.3\ \text{kJ/kg}}{2921.4\ \text{kJ/kg}} = \mathbf{0.492\ or\ 49.2\%}$$

Discussion This problem was worked out in Example 10–4 for the same pressure and temperature limits with reheat but without the regeneration process.
A comparison of the two results reveals that the thermal efficiency of the cycle has increased from 45.0 to 49.2 percent as a result of regeneration.

The thermal efficiency of this cycle could also be determined from

$$\eta_{th} = \frac{w_{net}}{q_{in}} = \frac{w_{turb,\ out} - w_{pump,\ in}}{q_{in}}$$

$$w_{turb,\ out} = (h_9 - h_{10}) + (1 - y)(h_{11} - h_{12}) + (1 - y - z)(h_{12} - h_{13})$$
$$w_{pump,\ in} = (1 - y - z)w_{pump\ I,\ in} + (1 - y)w_{pump\ II,\ in} + (y)w_{pump\ III,\ in}$$

SECOND-LAW ANALYSIS OF VAPOR POWER CYCLES

Exergy destruction for a steady-flow system

$$\dot{X}_{\text{dest}} = T_0 \dot{S}_{\text{gen}} = T_0(\dot{S}_{\text{out}} - \dot{S}_{\text{in}}) = T_0\left(\sum \dot{m}_e s_e + \frac{\dot{Q}_{\text{out}}}{T_{b,\,\text{out}}} - \sum \dot{m}_i s_i - \frac{\dot{Q}_{\text{in}}}{T_{b,\,\text{in}}}\right)$$

Steady-flow, one-inlet, one-exit

$$x_{\text{dest}} = T_0 s_{\text{gen}} = T_0\left(s_e - s_i + \frac{q_{\text{out}}}{T_{b,\,\text{out}}} - \frac{q_{\text{in}}}{T_{b,\,\text{in}}}\right) \qquad (\text{kJ/kg})$$

Exergy destruction of a cycle

$$x_{\text{dest}} = T_0\left(\sum \frac{q_{\text{out}}}{T_{b,\,\text{out}}} - \sum \frac{q_{\text{in}}}{T_{b,\,\text{in}}}\right) \qquad (\text{kJ/kg})$$

For a cycle with heat transfer only with a source and a sink

$$x_{\text{dest}} = T_0\left(\frac{q_{\text{out}}}{T_L} - \frac{q_{\text{in}}}{T_H}\right) \qquad (\text{kJ/kg})$$

Stream exergy

$$\psi = (h - h_0) - T_0(s - s_0) + \frac{V^2}{2} + gz \qquad (\text{kJ/kg})$$

A second-law analysis of vaporpower cycles reveals where the largest irreversibilities occur and where to start improvements.

EXAMPLE 10–7

Determine the exergy destruction associated with the Rankine cycle (all four processes as well as the cycle) discussed in Example 10–1, assuming that heat is transferred to the steam in a furnace at 1600 K and heat is rejected to a cooling medium at 290 K and 100 kPa. Also, determine the exergy of the steam leaving the turbine.

Solution The Rankine cycle analyzed in Example 10–1 is reconsidered. For specified source and sink temperatures, the exergy destruction associated with the cycle and exergy of the steam at turbine exit are to be determined.

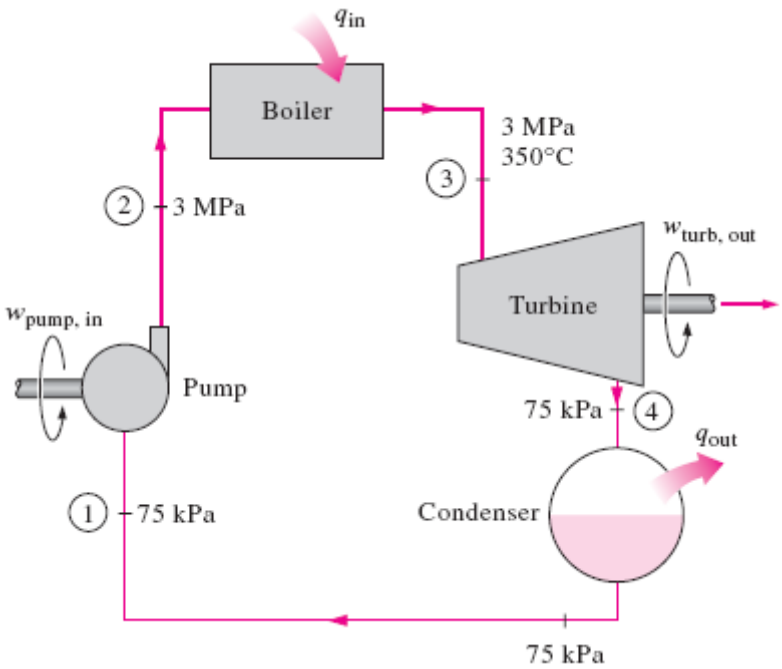

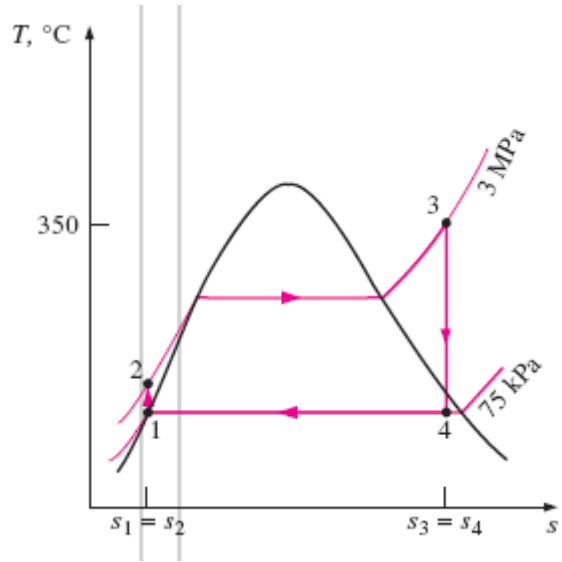

Processes 1-2 and 3-4 are isentropic (s_1=s_2, s_3=s_4) and therefore do not involve any internal or external irreversibilities, that is,

$$x_{\text{dest, 12}} = \mathbf{0} \quad \text{and} \quad x_{\text{dest, 34}} = \mathbf{0}$$

$$s_2 = s_1 = s_{f\ @\ 75\ \text{kPa}} = 1.2132\ \text{kJ/kg}\cdot\text{K}$$

$$s_4 = s_3 = 6.7450\ \text{kJ/kg}\cdot\text{K} \qquad (\text{at } 3\ \text{MPa}, 350°\text{C})$$

$$x_{\text{dest, 23}} = T_0\left(s_3 - s_2 - \frac{q_{\text{in, 23}}}{T_{\text{source}}}\right)$$

$$= (290\ \text{K})\left[(6.7450 - 1.2132)\ \text{kJ/kg}\cdot\text{K} - \frac{2728.6\ \text{kJ/kg}}{1600\ \text{K}}\right]$$

$$= \mathbf{1109.7\ kJ/kg}$$

$$x_{\text{dest, 41}} = T_0\left(s_1 - s_4 + \frac{q_{\text{out,41}}}{T_{\text{sink}}}\right)$$

$$= (290\ \text{K})\left[(1.2132 - 6.7450)\ \text{kJ/kg}\cdot\text{K} + \frac{2018.6\ \text{kJ/kg}}{290\ \text{K}}\right]$$

$$= \mathbf{414.4\ kJ/kg}$$

Therefore, the irreversibility of the cycle is

$$x_{\text{dest, cycle}} = x_{\text{dest, 12}} + x_{\text{dest, 23}} + x_{\text{dest, 34}} + x_{\text{dest, 41}}$$
$$= 0 + 1109.7 \text{ kJ/kg} + 0 + 414.4 \text{ kJ/kg}$$
$$= \mathbf{1524.1 \text{ kJ/kg}}$$

The exergy (work potential) of the steam leaving the turbine is determined from Eq. 10–22. Disregarding the kinetic and potential energies, it reduces to

$$\psi_4 = (h_4 - h_0) - T_0(s_4 - s_0) + \frac{V_4^2}{2}^{\nearrow 0} + gz_4^{\nearrow 0}$$
$$= (h_4 - h_0) - T_0(s_4 - s_0)$$

$$h_0 = h_{@\ 290\text{ K, }100\text{ kPa}} \cong h_{f\ @\ 290\text{ K}} = 71.355 \text{ kJ/kg}$$
$$s_0 = s_{@\ 290\text{ K, }100\text{ kPa}} \cong s_{f\ @\ 290\text{ K}} = 0.2533 \text{ kJ/kg}\cdot\text{K}$$

$$\psi_4 = (2403.0 - 71.355) \text{ kJ/kg} - (290 \text{ K})[(6.7450 - 0.2533) \text{ kJ/kg}\cdot\text{K}]$$
$$= \mathbf{449.1 \text{ kJ/kg}}$$

Discussion Note that 449.1 kJ/kg of work could be obtained from the steam leaving the turbine if it is brought to the state of the surroundings in a reversible manner.

COGENERATION

Many industries require energy input in the form of heat, called ***process heat***. Process heat in these industries is usually supplied by steam at 5 to 7 atm and 150 to 200°C. Energy is usually transferred to the steam by burning coal, oil, natural gas, or another fuel in a furnace.

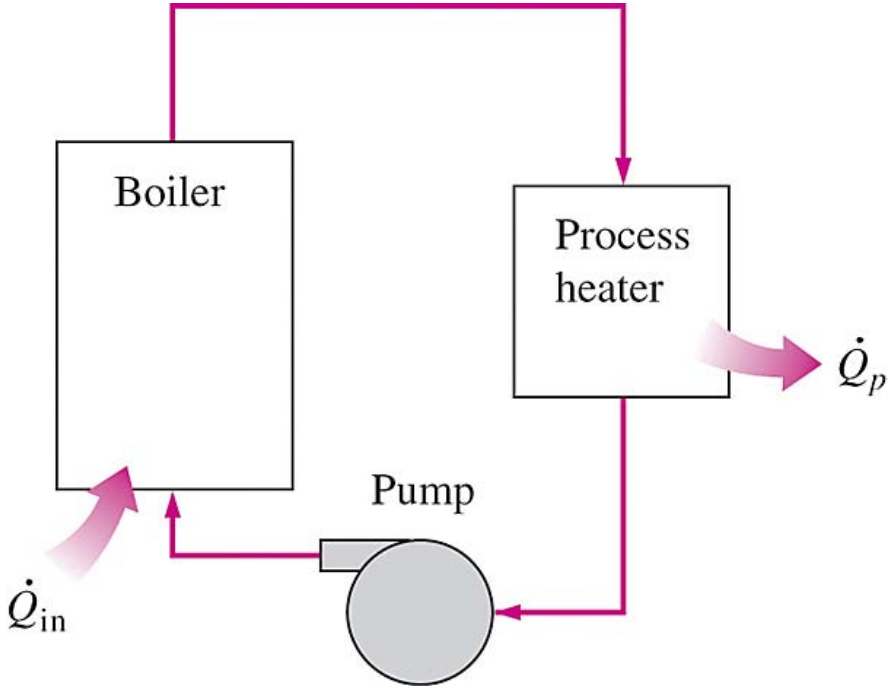

A simple process-heating plant.

Industries that use large amounts of process heat also consume a large amount of electric power.

It makes sense to use the already-existing work potential to produce power instead of letting it go to waste.

The result is a plant that produces electricity while meeting the process-heat requirements of certain industrial processes (cogeneration plant)

Cogeneration: The production of more than one useful form of energy (such as process heat and electric power) from the same energy source.

Utilization factor

$$\epsilon_u = \frac{\text{Net work output} + \text{Process heat delivered}}{\text{Total heat input}} = \frac{\dot{W}_{net} + \dot{Q}_p}{\dot{Q}_{in}}$$

$$\epsilon_u = 1 - \frac{\dot{Q}_{out}}{\dot{Q}_{in}}$$

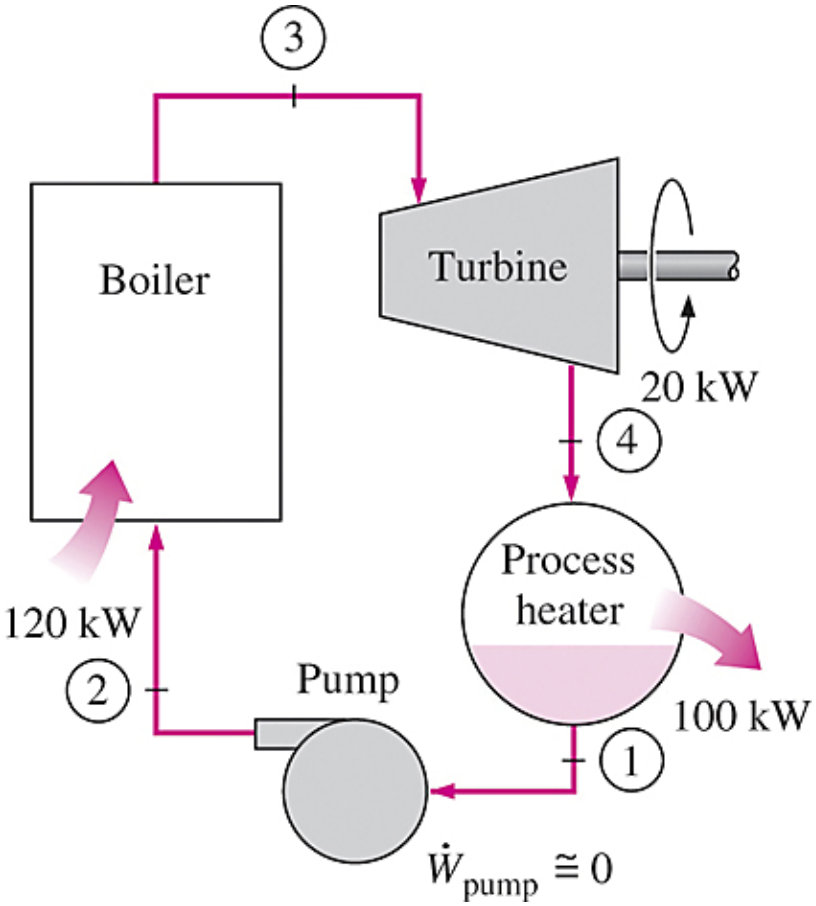

An ideal cogeneration plant.

- The utilization factor of the ideal steam-turbine cogeneration plant is 100%.
- Actual cogeneration plants have utilization factors as high as 80%.
- Some recent cogeneration plants have even higher utilization factors.

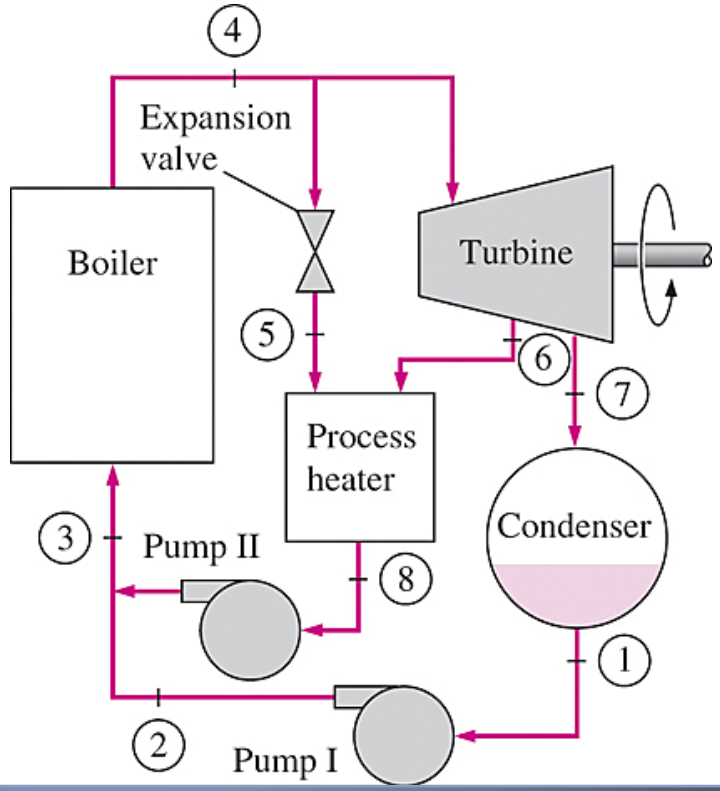

A cogeneration plant with adjustable loads.

$$\dot{Q}_{in} = \dot{m}_3(h_4 - h_3)$$

$$\dot{Q}_{out} = \dot{m}_7(h_7 - h_1)$$

$$\dot{Q}_p = \dot{m}_5 h_5 + \dot{m}_6 h_6 - \dot{m}_8 h_8$$

$$\dot{W}_{turb} = (\dot{m}_4 - \dot{m}_5)(h_4 - h_6) + \dot{m}_7(h_6 - h_7)$$

At times of high demand for process heat, all the steam is routed to the process-heating units and none to the condenser (m_7= 0). The waste heat is zero in this mode.

If this is not sufficient, some steam leaving the boiler is throttled by an expansion or pressure-reducing valve to the extraction pressure P_6 and is directed to the process-heating unit.

Maximum process heating is realized when all the steam leaving the boiler passes through the PRV (m_5= m_4). No power is produced in this mode.

When there is no demand for process heat, all the steam passes through the turbine and the condenser (m_5=m_6=0), and the cogeneration plant operates as an ordinary steam power plant.

EXAMPLE 10–8

Consider the cogeneration plant, steam enters the turbine at 7 MPa and 500°C. Some steam is extracted from the turbine at 500 kPa for process heating. The remaining steam continues to expand to 5 kPa. Steam is then condensed at constant pressure and pumped to the boiler pressure of 7 MPa. At times of high demand for process heat, some steam leaving the boiler is throttled to 500 kPa and is routed to the process heater. The extraction fractions are adjusted so that steam leaves the process heater as a saturated liquid at 500 kPa. It is subsequently pumped to 7 MPa. The mass flow rate of steam through the boiler is 15 kg/s. Disregarding any pressure drops and heat losses in the piping and assuming the turbine and the pump to be isentropic, determine (*a*) the maximum rate at which process heat can be supplied, (*b*) the power produced and the utilization factor when no process heat is supplied, and (*c*) the rate of process heat supply when 10 % of the steam is extracted before it enters the turbine and 70 % of the steam is extracted from the turbine at 500 kPa for process heating.

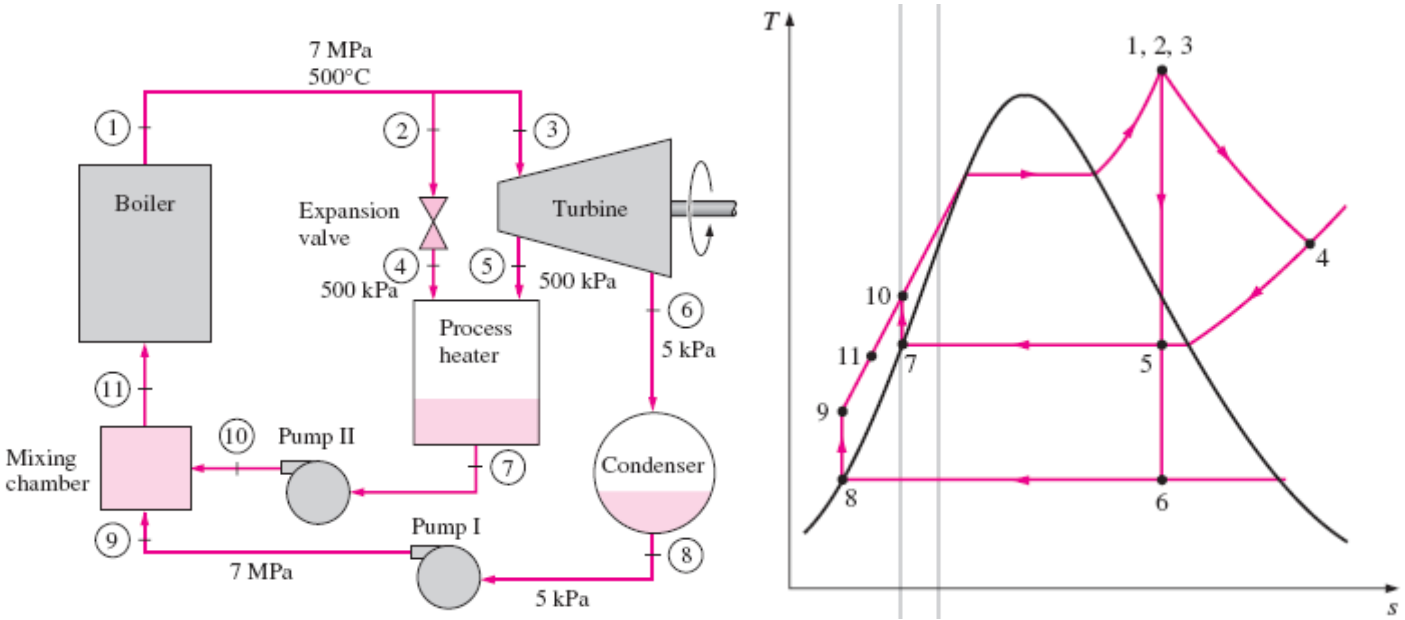

Solution A cogeneration plant is considered. The maximum rate of process heat supply, the power produced and the utilization factor when no process heat is supplied, and the rate of process heat supply when steam is extracted from the steam line and turbine at specified ratios are to be determined.

Assumptions **1** Steady operating conditions exist. **2** Pressure drops and heat losses in piping are negligible. **3** Kinetic and potential energy changes are negligible.

$$w_{\text{pump I, in}} = v_8(P_9 - P_8) = (0.001005\ \text{m}^3/\text{kg})[(7000 - 5)\text{kPa}]\left(\frac{1\ \text{kJ}}{1\ \text{kPa}\cdot\text{m}^3}\right)$$

$$= 7.03\ \text{kJ/kg}$$

$$w_{\text{pump II, in}} = v_7(P_{10} - P_7) = (0.001093\ \text{m}^3/\text{kg})[(7000 - 500)\ \text{kPa}]\left(\frac{1\ \text{kJ}}{1\ \text{kPa}\cdot\text{m}^3}\right)$$

$$= 7.10\ \text{kJ/kg}$$

$$h_1 = h_2 = h_3 = h_4 = 3411.4\ \text{kJ/kg} \qquad h_5 = 2739.3\ \text{kJ/kg} \qquad h_6 = 2073.0\ \text{kJ/kg}$$

$$h_7 = h_{f\ @\ 500\ \text{kPa}} = 640.09\ \text{kJ/kg} \qquad h_8 = h_{f\ @\ 5\ \text{kPa}} = 137.75\ \text{kJ/kg}$$

$$h_9 = h_8 + w_{\text{pump I, in}} = (137.75 + 7.03)\ \text{kJ/kg} = 144.78\ \text{kJ/kg}$$

$$h_{10} = h_7 + w_{\text{pump II, in}} = (640.09 + 7.10)\ \text{kJ/kg} = 647.19\ \text{kJ/kg}$$

(*a*) The maximum rate of process heat is achieved when all the steam leaving the boiler is throttled and sent to the process heater and none is sent to the turbine (that is, $\dot{m}_4 = \dot{m}_7 = \dot{m}_1 = 15$ kg/s and $\dot{m}_3 = \dot{m}_5 = \dot{m}_6 = 0$)

$$\dot{Q}_{p,\,\max} = \dot{m}_1(h_4 - h_7) = (15\ \text{kg/s})[(3411.4 - 640.09)\ \text{kJ/kg}] = \mathbf{41{,}570\ kW}$$

The utilization factor is 100 % in this case since no heat is rejected in the condenser, heat losses from the piping and other components are assumed to be negligible, and combustion losses are not considered.

(*b*) When no process heat is supplied, all the steam leaving the boiler will pass through the turbine and will expand to the condenser pressure of 5 kPa (that is, $\dot{m}_3 = \dot{m}_6 = \dot{m}_1 = 15$ kg/s and $\dot{m}_2 = \dot{m}_5 = 0$). Maximum power will be produced;

$$\dot{W}_{\text{turb, out}} = \dot{m}(h_3 - h_6) = (15\ \text{kg/s})[(3411.4 - 2073.0)\ \text{kJ/kg}] = 20{,}076\ \text{kW}$$

$$\dot{W}_{\text{pump, in}} = (15\ \text{kg/s})(7.03\ \text{kJ/kg}) = 105\ \text{kW}$$

$$\dot{W}_{\text{net, out}} = \dot{W}_{\text{turb, out}} - \dot{W}_{\text{pump, in}} = (20{,}076 - 105)\ \text{kW} = \mathbf{19{,}971\ kW}$$

$$\dot{Q}_{\text{in}} = \dot{m}_1(h_1 - h_{11}) = (15\ \text{kg/s})[(3411.4 - 144.78)\ \text{kJ/kg}] = 48{,}999\ \text{kW}$$

$$\epsilon_u = \frac{\dot{W}_{\text{net}} + \dot{Q}_p}{\dot{Q}_{\text{in}}} = \frac{(19{,}971 + 0)\ \text{kW}}{48{,}999\ \text{kW}} = \mathbf{0.408\ or\ 40.8\%}$$

That is, 40.8 percent of the energy is utilized for a useful purpose. Notice that the utilization factor is equivalent to the thermal efficiency in this case.

(c) Neglecting any kinetic and potential energy changes, an energy balance on the process heater yields

$$\dot{E}_{in} = \dot{E}_{out}$$

$$\dot{m}_4 h_4 + \dot{m}_5 h_5 = \dot{Q}_{p,\,out} + \dot{m}_7 h_7$$

$$Q_{p,\,out} = \dot{m}_4 h_4 + \dot{m}_5 h_5 - \dot{m}_7 h_7$$

$$\dot{m}_4 = (0.1)(15\ \text{kg/s}) = 1.5\ \text{kg/s}$$

$$\dot{m}_5 = (0.7)(15\ \text{kg/s}) = 10.5\ \text{kg/s}$$

$$\dot{m}_7 = \dot{m}_4 + \dot{m}_5 = 1.5 + 10.5 = 12\ \text{kg/s}$$

$$\begin{aligned}\dot{Q}_{p,\,out} &= (1.5\ \text{kg/s})(3411.4\ \text{kJ/kg}) + (10.5\ \text{kg/s})(2739.3\ \text{kJ/kg}) \\ &\quad - (12\ \text{kg/s})(640.09\ \text{kJ/kg}) \\ &= \mathbf{26{,}199\ kW}\end{aligned}$$

Discussion Note that 26,199 kW of the heat transferred will be utilized in the process heater. We could also show that 10,966 kW of power is produced in this case, and the rate of heat input in the boiler is 42,970 kW. Thus the utilization factor is 86.5 percent.

COMBINED GAS-VAPOR POWER CYCLES

- The continued quest for higher thermal efficiencies has resulted in rather innovative modifications to conventional power plants.
- A popular modification involves a gas power cycle topping a vapor power cycle, which is called the **combined gas–vapor cycle**, or just the **combined cycle**.
- The combined cycle of greatest interest is the gas-turbine (Brayton) cycle topping a steam-turbine (Rankine) cycle, which has a higher thermal efficiency than either of the cycles executed individually.
- It makes engineering sense to take advantage of the very desirable characteristics of the gas-turbine cycle at high temperatures *and* to use the high-temperature exhaust gases as the energy source for the bottoming cycle such as a steam power cycle. The result is a combined gas–steam cycle.
- Recent developments in gas-turbine technology have made the combined gas–steam cycle economically very attractive.
- The combined cycle increases the efficiency without increasing the initial cost greatly. Consequently, many new power plants operate on combined cycles, and many more existing steam- or gas-turbine plants are being converted to combined-cycle power plants.
- Thermal efficiencies over 50% are reported.

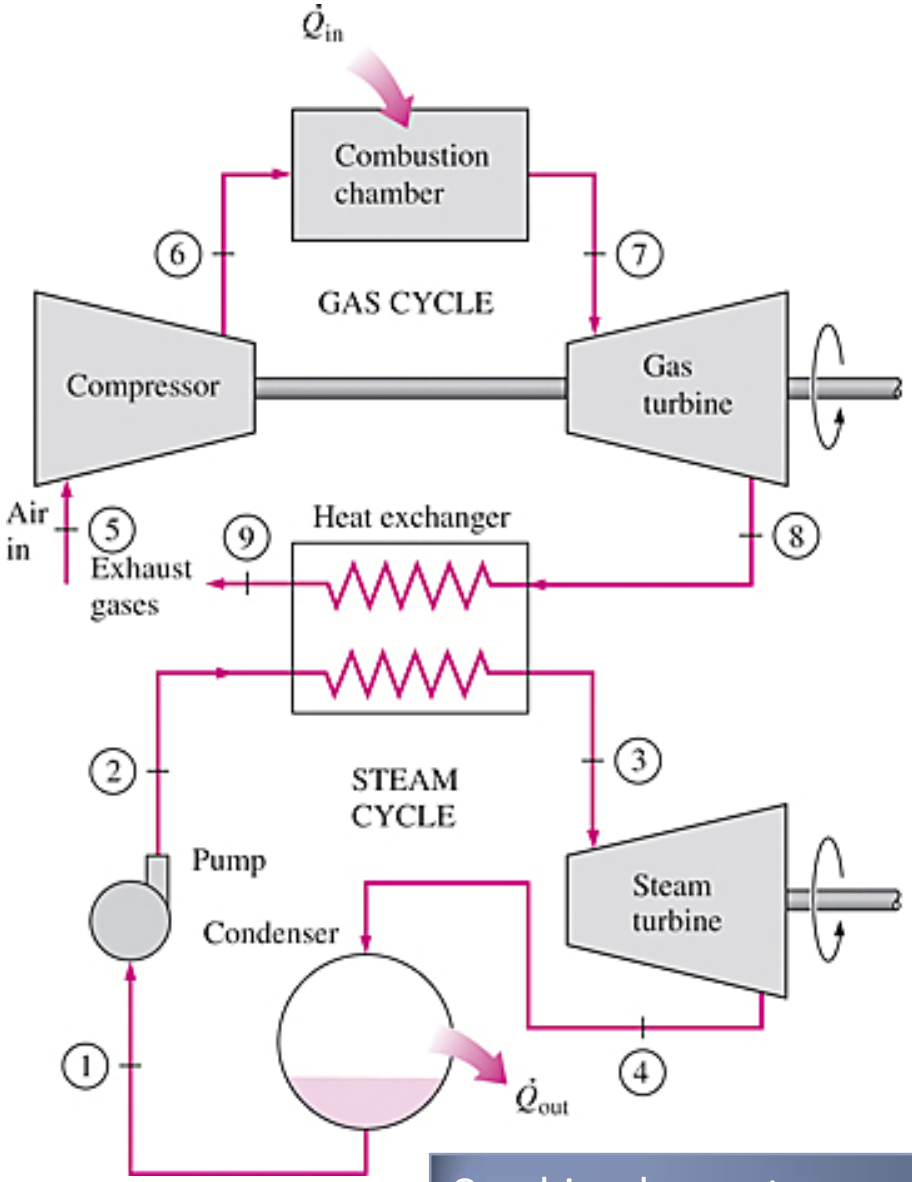

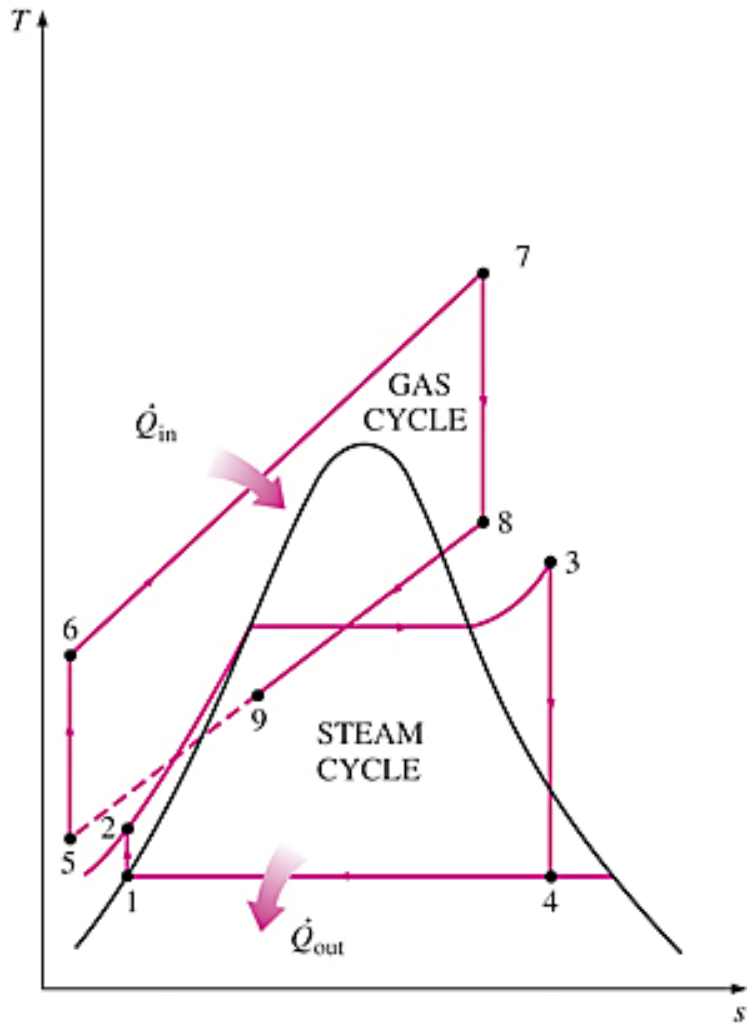

Combined gas–steam power plant.

SUMMARY

- The Carnot vapor cycle
- Rankine cycle: The ideal cycle for vapor power cycles
  - Energy analysis of the ideal Rankine cycle
- Deviation of actual vapor power cycles from idealized ones
- How can we increase the efficiency of the Rankine cycle?
  - Lowering the condenser pressure (*Lowers* $T_{low,avg}$)
  - Superheating the steam to high temperatures (*Increases* $T_{high,avg}$)
  - Increasing the boiler pressure (*Increases* $T_{high,avg}$)
- The ideal reheat Rankine cycle
- The ideal regenerative Rankine cycle
  - Open feedwater heaters
  - Closed feedwater heaters
- Second-law analysis of vapor power cycles
- Cogeneration
- Combined gas–vapor power cycles

EXAMPLE 1

Steam is the working fluid in an ideal Rankine cycle. Saturated vapor enters the turbine at 8.0 MPa and saturated liquid exits the condenser at a pressure of 0.008 MPa. The *net* power output of the cycle is 100 MW. Determine for the cycle

(a) the thermal efficiency,
(b) the back work ratio,
(c) the mass flow rate of the steam, in kg/h,
(d) the rate of heat transfer, $\dot{Q}_{in}$, into the working fluid as it passes through the boiler, in MW,
(e) the rate of heat transfer $\dot{Q}_{out}$, from the condensing steam as it passes through the condenser,
(f) the mass flow rate of the condenser cooling water, in kg/ h, if cooling water enters the condenser at 15C and exits at 35C.

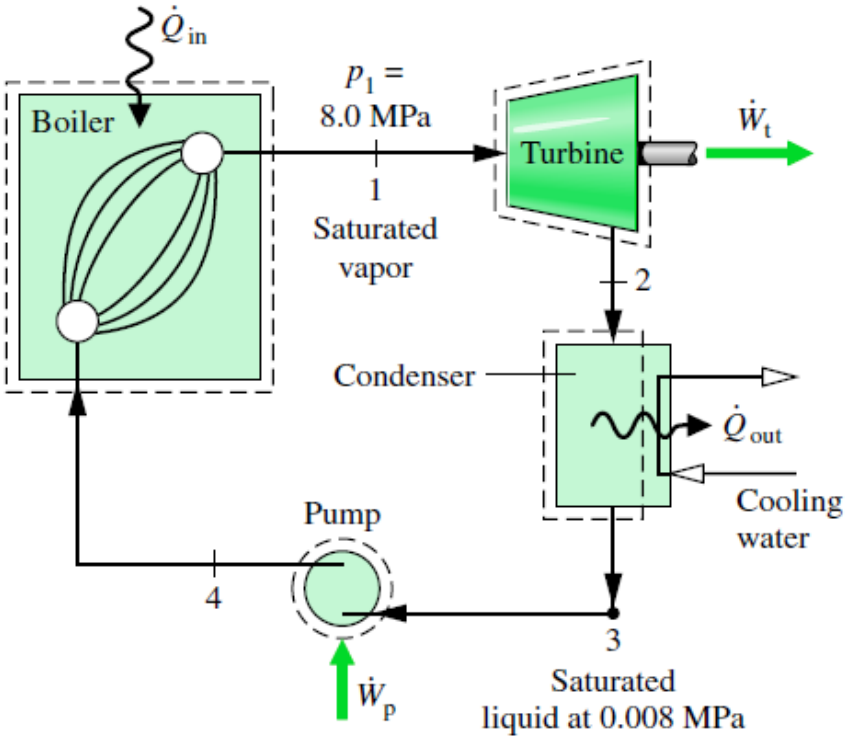

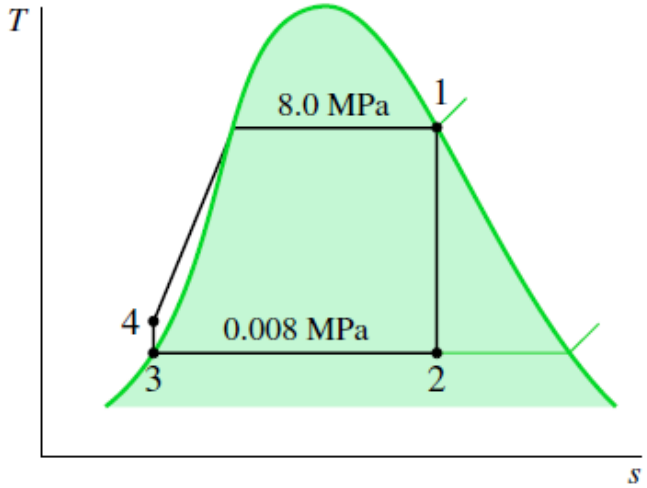

h_1= 2758.0 kJ/kg and s_1= 5.7432 kJ/kg K.

$$x_2 = \frac{s_2 - s_f}{s_g - s_f} = \frac{5.7432 - 0.5926}{7.6361} = 0.6745$$

$$h_2 = h_f + x_2 h_{fg} = 173.88 + (0.6745)2403.1$$
$$= 1794.8 \text{ kJ/kg}$$

State 3 is saturated liquid at 0.008 MPa, so $h_3 = 173.88$ kJ/kg.

$$h_4 = h_3 + \dot{W}_p/\dot{m} = h_3 + v_3(p_4 - p_3)$$

$$h_4 = 173.88 \text{ kJ/kg} + (1.0084 \times 10^{-3} \text{ m}^3/\text{kg})(8.0 - 0.008)\text{MPa}$$

$$= 173.88 + 8.06 = 181.94 \text{ kJ/kg}$$

(a) The *net* power developed by the cycle is

$$\dot{W}_{cycle} = \dot{W}_t - \dot{W}_p$$

$$\frac{\dot{Q}_{in}}{\dot{m}} = h_1 - h_4$$

$$\frac{\dot{W}_t}{\dot{m}} = h_1 - h_2 \quad \text{and} \quad \frac{\dot{W}_p}{\dot{m}} = h_4 - h_3$$

$$\eta = \frac{\dot{W}_t - \dot{W}_p}{\dot{Q}_{in}} = \frac{(h_1 - h_2) - (h_4 - h_3)}{h_1 - h_4}$$

$$= \frac{[(2758.0 - 1794.8) - (181.94 - 173.88)]\ \text{kJ/kg}}{(2758.0 - 181.94)\ \text{kJ/kg}}$$

$$= 0.371\ (37.1\%)$$

(b) The back work ratio is

$$\text{bwr} = \frac{\dot{W}_p}{\dot{W}_t} = \frac{h_4 - h_3}{h_1 - h_2} = \frac{(181.94 - 173.88)\ \text{kJ/kg}}{(2758.0 - 1794.8)\ \text{kJ/kg}}$$

$$= \frac{8.06}{963.2} = 8.37 \times 10^{-3}\ (0.84\%)$$

(c) The mass flow rate of the steam can be obtained from the expression for the net power given in part (a).

$$\dot{m} = \frac{\dot{W}_{cycle}}{(h_1 - h_2) - (h_4 - h_3)}$$

$$= \frac{(100\ \text{MW})|10^3\ \text{kW/MW}||3600\ \text{s/h}|}{(963.2 - 8.06)\ \text{kJ/kg}}$$

$$= 3.77 \times 10^5\ \text{kg/h}$$

(d) With the expression for $\dot{Q}_{in}$ from part (a) and previously determined specific enthalpy values

$$\dot{Q}_{\text{in}} = \dot{m}(h_1 - h_4)$$
$$= \frac{(3.77 \times 10^5 \text{ kg/h})(2758.0 - 181.94) \text{ kJ/kg}}{|3600 \text{ s/h}||10^3 \text{ kW/MW}|}$$
$$= 269.77 \text{ MW}$$

(e) Mass and energy rate balances applied to a control volume enclosing the steam side of the condenser give

$$\dot{Q}_{\text{out}} = \dot{m}(h_2 - h_3)$$
$$= \frac{(3.77 \times 10^5 \text{ kg/h})(1794.8 - 173.88) \text{ kJ/kg}}{|3600 \text{ s/h}||10^3 \text{ kW/MW}|}$$
$$= 169.75 \text{ MW}$$

(f) Taking a control volume around the condenser, the mass and energy rate balances give at steady state

$$0 = \cancelto{0}{\dot{Q}_{\text{cv}}} - \cancelto{0}{\dot{W}_{\text{cv}}} + \dot{m}_{\text{cw}}(h_{\text{cw,in}} - h_{\text{cw,out}}) + \dot{m}(h_2 - h_3)$$

$\dot{m}_{cw}$ is the mass flow rate of the cooling water

$$\dot{m}_{cw} = \frac{\dot{m}(h_2 - h_3)}{(h_{cw,out} - h_{cw,in})}$$

$$\dot{m}_{cw} = \frac{(169.75\ \text{MW})|10^3\ \text{kW/MW}||3600\ \text{s/h}|}{(146.68 - 62.99)\ \text{kJ/kg}} = 7.3 \times 10^6\ \text{kg/h}$$

- Note that the back work ratio is relatively low for the Rankine cycle. In the present case, the work required to operate the pump is less than 1% of the turbine output.

- In this example, 62.9% of the energy added to the working fluid by heat transfer is subsequently discharged to the cooling water. Although considerable energy is carried away by the cooling water, its exergy is small because the water exits
at a temperature only a few degrees greater than that of the surroundings. See Sec. 8.6 for further discussion.

EXAMPLE 2

Reconsider the vapor power cycle of Example 1, but include in the analysis that the turbine and the pump each have an isentropic efficiency of 85%. Determine for the modified cycle

(a) the thermal efficiency,

(b) the mass flow rate of steam, in kg/h, for a net power output of 100 MW,

(c) the rate of heat transfer into the working fluid as it passes through the boiler, in MW,

(d) the rate of heat transfer from the condensing steam as it passes through the condenser, in MW,

(e) the mass flow rate of the condenser cooling water, in kg/h, if cooling water enters the condenser at 15C and exits as 35C. Discuss the effects on the vapor cycle of irreversibilities within the turbine and pump.

$$\eta_t = \frac{\dot{W}_t/\dot{m}}{(\dot{W}_t/\dot{m})_s} = \frac{h_1 - h_2}{h_1 - h_{2s}}$$

$$h_2 = h_1 - \eta_t(h_1 - h_{2s})$$
$$= 2758 - 0.85(2758 - 1794.8) = 1939.3\,\text{kJ/kg}$$

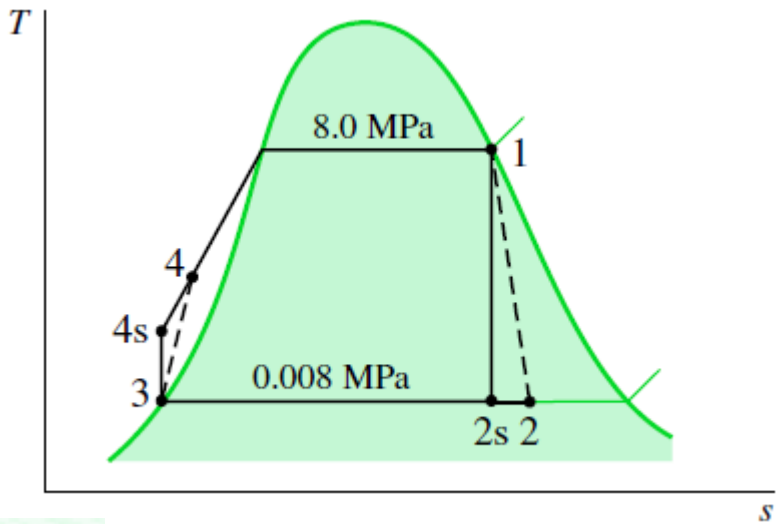

$$h_3 = 173.88 \text{ kJ/kg.}$$

$$h_4 = h_3 + \dot{W}_p/\dot{m}$$

$$\eta_p = \frac{(\dot{W}_p/\dot{m})_s}{(\dot{W}_p/\dot{m})}$$

$$\frac{\dot{W}_p}{\dot{m}} = \frac{v_3(p_4 - p_3)}{\eta_p}$$

$$\frac{\dot{W}_p}{\dot{m}} = \frac{8.06\,\text{kJ/kg}}{0.85} = 9.48 \text{ kJ/kg}$$

$$h_4 = h_3 + \dot{W}_p/\dot{m} = 173.88 + 9.48 = 183.36 \text{ kJ/kg}$$

(a) the thermal efficiency

$$\dot{W}_{cycle} = \dot{W}_t - \dot{W}_p = \dot{m}[(h_1 - h_2) - (h_4 - h_3)]$$

$$\dot{Q}_{in} = \dot{m}(h_1 - h_4)$$

$$\eta = \frac{(h_1 - h_2) - (h_4 - h_3)}{h_1 - h_4}$$

$$\eta = \frac{(2758 - 1939.3) - 9.48}{2758 - 183.36} = 0.314\ (31.4\%)$$

(b) the mass flow rate of the steam is

$$\dot{m} = \frac{\dot{W}_{cycle}}{(h_1 - h_2) - (h_4 - h_3)}$$

$$= \frac{(100\,\text{MW})|3600\ \text{s/h}|\,|10^3\,\text{kW/MW}|}{(818.7 - 9.48)\ \text{kJ/kg}} = 4.449 \times 10^5\,\text{kg/h}$$

(c) the rate of heat transfer into the working fluid as it passes through the boiler,

$$\dot{Q}_{in} = \dot{m}(h_1 - h_4)$$

$$= \frac{(4.449 \times 10^5\ \text{kg/h})(2758 - 183.36)\ \text{kJ/kg}}{|3600\ \text{s/h}|\,|10^3\,\text{kW/MW}|} = 318.2\,\text{MW}$$

(d) The rate of heat transfer from the condensing steam to the cooling water is

$$\dot{Q}_{out} = \dot{m}(h_2 - h_3)$$

$$= \frac{(4.449 \times 10^5 \text{ kg/h})(1939.3 - 173.88) \text{ kJ/kg}}{|3600 \text{ s/h}||10^3 \text{ kW/MW}|} = 218.2 \text{ MW}$$

(e) The mass flow rate of the cooling water can be determined from

$$\dot{m}_{cw} = \frac{\dot{m}(h_2 - h_3)}{(h_{cw,out} - h_{cw,in})}$$

$$= \frac{(218.2 \text{ MW})|10^3 \text{ kW/MW}||3600 \text{ s/h}|}{(146.68 - 62.99) \text{ kJ/kg}} = 9.39 \times 10^6 \text{ kg/h}$$

EXAMPLE 3 HEAT EXCHANGER EXERGY ANALYSIS

The heat exchanger unit of the boiler of Example 2 has a stream of water entering as a liquid at 8.0 MPa and exiting as a saturated vapor at 8.0 MPa. In a separate stream, gaseous products of combustion cool at a constant pressure of 1 atm from 1107 to 547C. The gaseous stream can be modeled as air as an ideal gas. Let *T*0 22C, *p*0 1 atm. Determine

(a) the net rate at which exergy is carried into the heat exchanger unit by the gas stream, in MW,
(b) the net rate at which exergy is carried from the heat exchanger by the water stream, in MW,
(c) the rate of exergy destruction, in MW,
(d) the exergetic efficiency given by Eq. 7.45.

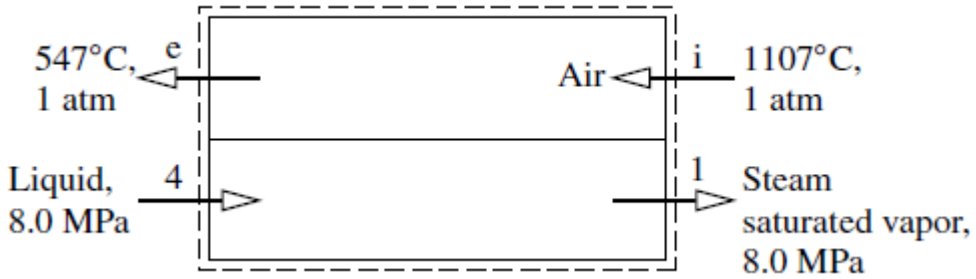

$$\dot{m}_i = \dot{m}_e \qquad \text{(air)}$$
$$\dot{m}_4 = \dot{m}_1 \qquad \text{(water)}$$

1. The control volume shown in the accompanying figure operates at steady state with .
2. Kinetic and potential energy effects can be ignored.
3. The gaseous combustion products are modeled as air as an ideal gas.
4. The air and the water each pass through the steam generator at constant pressure.
5. Only 69% of the exergy entering the plant with the fuel remains after accounting for the stack loss and combustion exergy destruction.
6. T_0= 22C, p_0=1 atm.

$$0 = \cancel{\dot{Q}_{cv}}^{0} - \cancel{\dot{W}_{cv}}^{0} + \dot{m}_a(h_i - h_e) + \dot{m}(h_4 - h_1)$$

$$h_1 = 2758 \text{ kJ/kg and } h_4 = 183.36 \text{ kJ/kg.}$$

$$\frac{\dot{m}_a}{\dot{m}} = \frac{h_1 - h_4}{h_i - h_e} \qquad \frac{\dot{m}_a}{\dot{m}} = \frac{2758 - 183.36}{1491.44 - 843.98} = 3.977 \frac{\text{kg (air)}}{\text{kg (steam)}}$$

(a) The net exergy rate into the heat exchanger;

$$\begin{bmatrix} \text{net rate at which exergy} \\ \text{is carried in by the} \\ \text{gaseous stream} \end{bmatrix} = \dot{m}_a(\mathsf{e}_{fi} - \mathsf{e}_{fe})$$

$$= \dot{m}_a[h_i - h_e - T_0(s_i - s_e)]$$

$$\dot{m}_a(\mathsf{e}_{fi} - \mathsf{e}_{fe}) = (17.694 \times 10^5 \text{ kg/h})[(1491.44 - 843.98) \text{ kJ/kg} - (295 \text{ K})(3.34474 - 2.74504)$$

$$= \frac{8.326 \times 10^8 \text{ kJ/h}}{|3600 \text{ s/h}|} \left| \frac{1 \text{ MW}}{10^3 \text{ kJ/s}} \right| = 231.28 \text{ MW}$$

(b) The net exergy rate of the boiler;

$$\begin{bmatrix}\text{net rate at which exergy}\\ \text{is carried out by the}\\ \text{water stream}\end{bmatrix} = \dot{m}(\mathsf{e}_{f1} - \mathsf{e}_{f4})$$

$$= \dot{m}[h_1 - h_4 - T_0(s_1 - s_4)]$$

$s_1 = 5.7432\ \text{kJ/kg}\cdot\text{K}$ $\quad h_4 = 183.36\ \text{kJ/kg}$ $\quad s_4 = 0.5957\ \text{kJ/kg}\cdot\text{K}$

$$\dot{m}(\mathsf{e}_{f1} - \mathsf{e}_{f4}) = (4.449 \times 10^5)[(2758 - 183.36) - 295(5.7432 - 0.5957)]$$

$$= \frac{4.699 \times 10^8\ \text{kJ/h}}{|3600\ \text{s/h}|}\left|\frac{1\ \text{MW}}{10^3\ \text{kJ/s}}\right| = 130.53\ \text{MW}$$

(c) The rate of exergy destruction can be evaluated by reducing the exergy rate balance to obtain

$$\dot{\mathsf{E}}_d = \dot{m}_a(\mathsf{e}_{fi} - \mathsf{e}_{fe}) + \dot{m}(\mathsf{e}_{f4} - \mathsf{e}_{f1})$$

$$\dot{\mathsf{E}}_d = 231.28\ \text{MW} - 130.53\ \text{MW} = 100.75\ \text{MW}$$

(d) The exergetic efficiency

$$\varepsilon = \frac{\dot{m}(\mathsf{e}_{f1} - \mathsf{e}_{f4})}{\dot{m}_a(\mathsf{e}_{fi} - \mathsf{e}_{fe})} = \frac{130.53\ \text{MW}}{231.28\ \text{MW}} = 0.564\ (56.4\%)$$

EXAMPLE 4 TURBINE AND PUMP EXERGY ANALYSIS

Reconsider the turbine and pump of Example 2. Determine for each of these components the rate at which exergy is destroyed, in MW. Express each result as a percentage of the exergy entering the plant with the fuel.

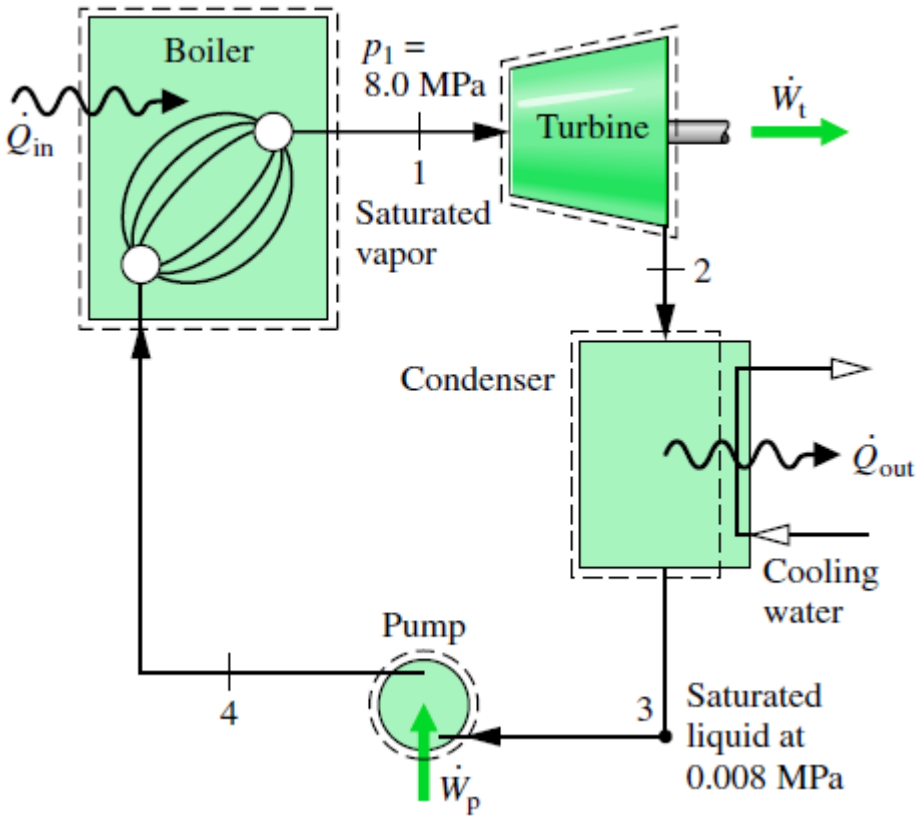

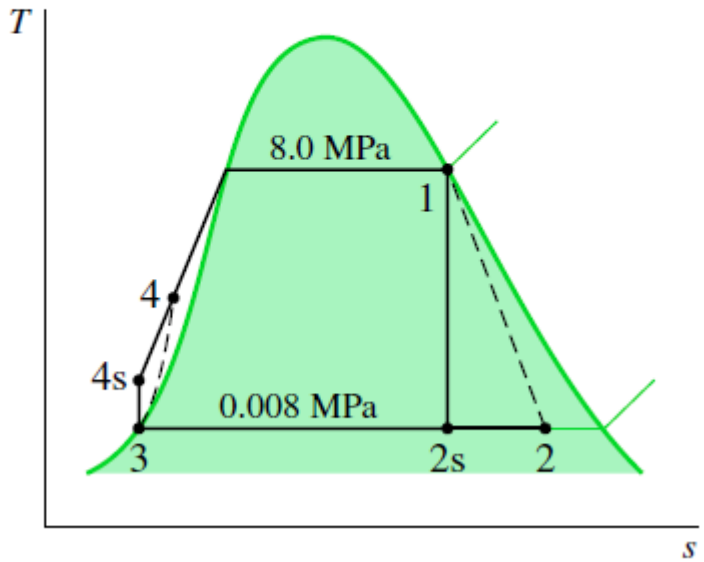

The turbine and pump operate adiabatically and each has an efficiency of 85%.

the rate of exergy destruction for the turbine

$$\dot{E}_d = \dot{m}T_0(s_2 - s_1)$$

$s_1 = 5.7432$ kJ/kg · K. $s_2 = 6.2021$ kJ/kg · K $h_2 = 1939.3$ kJ/kg

$$\dot{E}_d = (4.449 \times 10^5 \text{ kg/h})(295 \text{ K})(6.2021 - 5.7432)(\text{kJ/kg} \cdot \text{K})$$

$$= \left(0.602 \times 10^8 \frac{\text{kJ}}{\text{h}}\right)\left|\frac{1 \text{ h}}{3600 \text{ s}}\right|\left|\frac{1 \text{ MW}}{10^3 \text{ kJ/s}}\right| = 16.72 \text{ MW}$$

the net rate at which exergy is supplied by the cooling combustion gases is 231.28 MW. The turbine rate of exergy destruction expressed as a percentage of this is (16.72/231.28)(100%)= **7.23** %.

the exergy destruction rate for the pump

$$\dot{E}_d = \dot{m}T_0(s_4 - s_3)$$

$$\dot{E}_d = (4.449 \times 10^5 \text{ kg/h})(295 \text{ K})(0.5957 - 0.5926)(\text{kJ/kg} \cdot \text{K})$$

$$= \left(4.07 \times 10^5 \frac{\text{kJ}}{\text{h}}\right)\left|\frac{1 \text{ h}}{3600 \text{ s}}\right|\left|\frac{1 \text{ MW}}{10^3 \text{ kJ/s}}\right| = 0.11 \text{ MW}$$

(0.11/231.28)(69%) = **0.03**%.

The net power output of the vapor power plant of Example 2 is 100 MW. Expressing this as a percentage of the rate at which exergy is carried into the plant with the fuel, (100/231.28)(69%) = **30**%

EXAMPLE 5 CONDENSER EXERGY ANALYSIS

The condenser of Example 2 involves two separate water streams. In one stream a two-phase liquid–vapor mixture enters at 0.008 MPa and exits as a saturated liquid at 0.008 MPa. In the other stream, cooling water enters at 15C and exits at 35C.

(a) Determine the net rate at which exergy is carried from the condenser by the cooling water, in MW. Express this result as a percentage of the exergy entering the plant with the fuel.

(b) Determine for the condenser the rate of exergy destruction, in MW. Express this result as a percentage of the exergy entering the plant with the fuel.

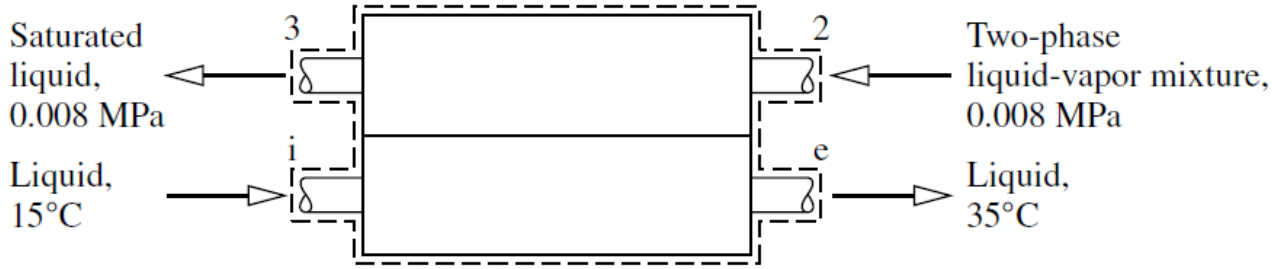

(a) The net rate at which exergy is carried out of the condenser

$$\begin{bmatrix}\text{net rate at which exergy}\\ \text{is carried out by the}\\ \text{cooling water}\end{bmatrix} = \dot{m}_{cw}(\mathsf{e}_{fe} - \mathsf{e}_{fi})$$

$$= \dot{m}_{cw}[h_e - h_i - T_0(s_e - s_i)]$$

$$\dot{m}_{cw}(\mathsf{e}_{fe} - \mathsf{e}_{fi}) = (9.39 \times 10^6 \text{ kg/h})[(146.68 - 62.99) \text{ kJ/kg} - (295 \text{ K})(0.5053 - 0.2245) \text{ kJ/kg} \cdot \text{K}]$$

$$= \frac{8.019 \times 10^6 \text{ kJ/h}}{|3600 \text{ s/h}|}\left|\frac{1 \text{ MW}}{10^3 \text{ kJ/s}}\right| = 2.23 \text{ MW}$$

As a percentage of the exergy entering the plant with the fuel; (2.23/231.28)(69%) = **1**%.

(b) The rate of exergy destruction for the condenser can be evaluated by reducing the exergy rate balance. Alternatively, the relationship $\dot{E}_d = T_o \dot{\sigma}_{cv}$ can be employed, where $\dot{\sigma}_{cv}$ is the time rate of entropy production for the condenser determined from
an entropy rate balance. With either approach, the rate of exergy destruction can be expressed as

$$\dot{E}_d = T_0[\dot{m}(s_3 - s_2) + \dot{m}_{cw}(s_e - s_i)]$$

$$\dot{E}_d = 295[(4.449 \times 10^5)(0.5926 - 6.2021) + (9.39 \times 10^6)(0.5053 - 0.2245)]$$

$$= \frac{416.1 \times 10^5 \text{ kJ/h}}{|3600 \text{ s/h}|} \left| \frac{1 \text{ MW}}{10^3 \text{ kJ/s}} \right| = 11.56 \text{ MW}$$

Expressing this as a percentage of the exergy entering the plant with the fuel, (11.56/231.28)(69%) = **3** %

Vapor Power Plant Exergy Accounting

Outputs		
	Net power out	30%
	Losses	
	Condenser cooling water	1%
	Stack gases (assumed)	1%
Exergy Destruction		
	Boiler	
	Combustion unit (assumed)	30%
	Heat exchanger unit	30%
	Turbine	5%
	Pump	—
	Condenser	3%
Total		**100%**

Thermodynamics: An Engineering Approach, 5th Edition
Yunus A. Cengel, Michael A. Boles
McGraw-Hill, 2008

Chapter 11
REFRIGERATION CYCLES

Prof. Dr. Ali PINARBAŞI
Yildiz Technical University
Mechanical Engineering Department
Yildiz, ISTANBUL

Objectives

- Introduce the concepts of refrigerators and heat pumps and the measure of their performance.
- Analyze the ideal vapor-compression refrigeration cycle.
- Analyze the actual vapor-compression refrigeration cycle.
- Review the factors involved in selecting the right refrigerant for an application.
- Discuss the operation of refrigeration and heat pump systems.
- Evaluate the performance of innovative vapor-compression refrigeration systems.
- Analyze gas refrigeration systems.
- Introduce the concepts of absorption-refrigeration systems.

REFRIGERATORS AND HEAT PUMPS

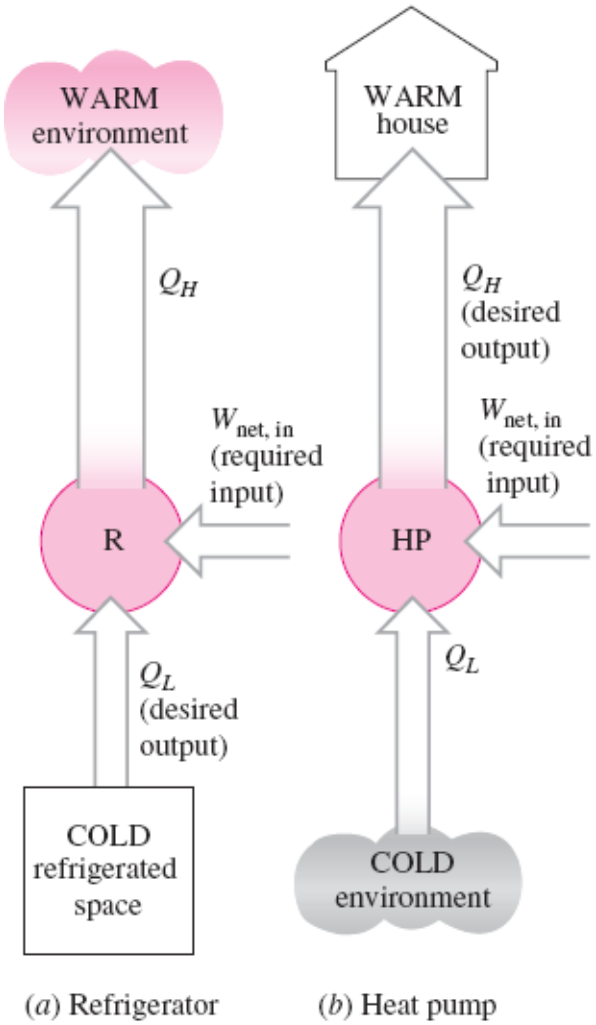

(*a*) Refrigerator (*b*) Heat pump

The transfer of heat from a low-temperature region to a high-temperature one requires special devices called **refrigerators**.

Refrigerators and heat pumps are essentially the same devices; they differ in their objectives only.

$$COP_R = \frac{\text{Desired output}}{\text{Required input}} = \frac{\text{Cooling effect}}{\text{Work input}} = \frac{Q_L}{W_{net, in}}$$

$$COP_{HP} = \frac{\text{Desired output}}{\text{Required input}} = \frac{\text{Heating effect}}{\text{Work input}} = \frac{Q_H}{W_{net, in}}$$

$$\boxed{COP_{HP} = COP_R + 1}$$

for fixed values of Q_L and Q_H

The objective of a refrigerator is to remove heat (Q_L) from the cold medium; the objective of a heat pump is to supply heat (Q_H) to a warm medium.

Refrigeration Cycle

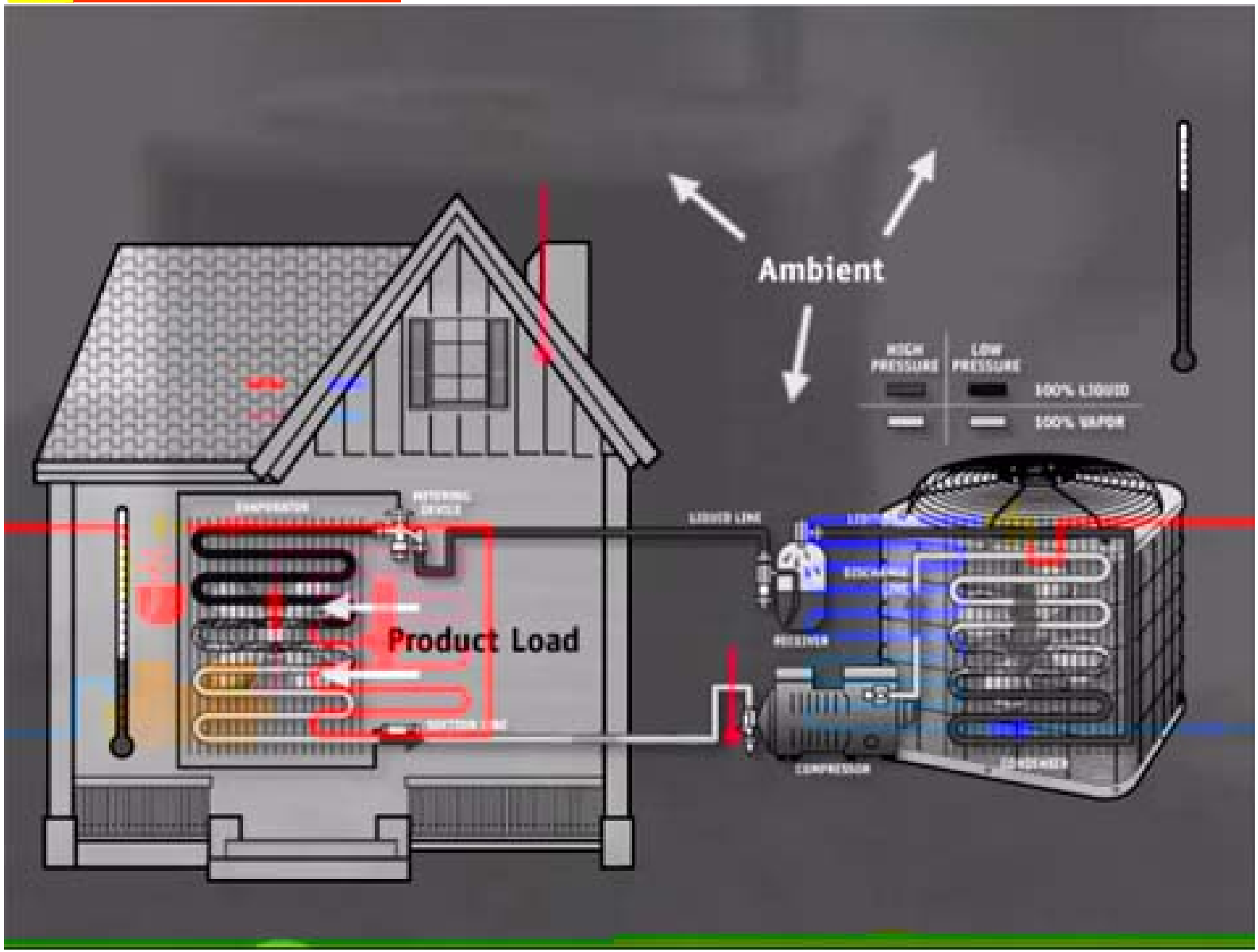

THE REVERSED CARNOT CYCLE

The reversed Carnot cycle is the *most efficient* refrigeration cycle operating between T_L *and* T_H.

However, it is not a suitable model for refrigeration cycles since processes 2-3 and 4-1 are not practical because

Process 2-3 involves the compression of a liquid–vapor mixture, which requires a compressor that will handle two phases, and process 4-1 involves the expansion of high-moisture-content refrigerant in a turbine.

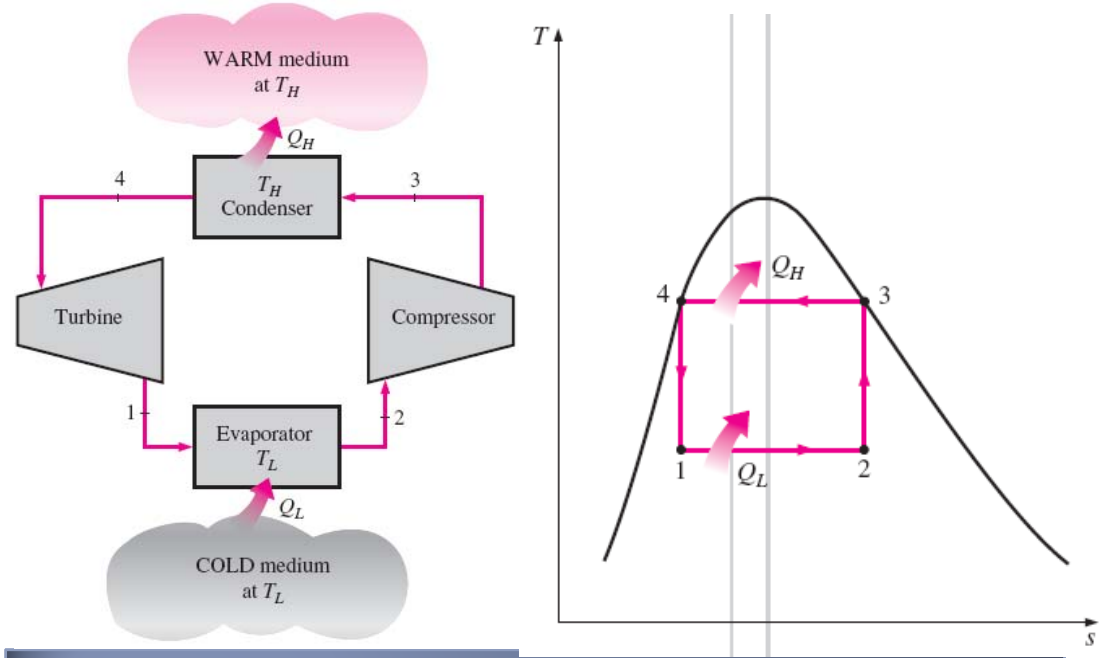

Schematic of a Carnot refrigerator and *T-s* diagram of the reversed Carnot cycle.

$$\mathrm{COP}_{\mathrm{R,\ Carnot}} = \frac{1}{T_H/T_L - 1}$$

$$\mathrm{COP}_{\mathrm{HP,\ Carnot}} = \frac{1}{1 - T_L/T_H}$$

Both COPs increase as the difference between the two temperatures decreases, that is, as T_L rises or T_H falls.

THE IDEAL VAPOR-COMPRESSION REFRIGERATION CYCLE

The **vapor-compression refrigeration cycle** is the ideal model for refrigeration systems. Unlike the reversed Carnot cycle, the refrigerant is vaporized completely before it is compressed and the turbine is replaced with a throttling device.

1-2	Isentropic compression in a compressor
2-3	Constant-pressure heat rejection in a condenser
3-4	Throttling in an expansion device
4-1	Constant-pressure heat absorption in an evaporator

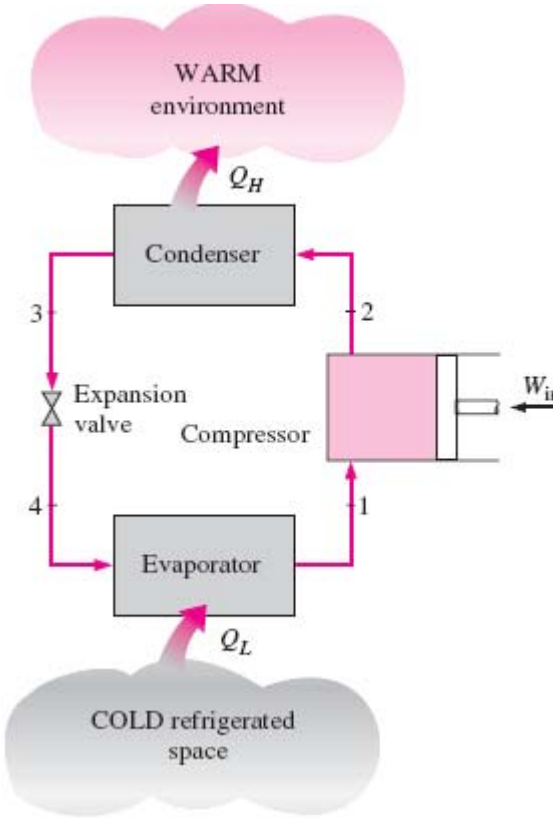

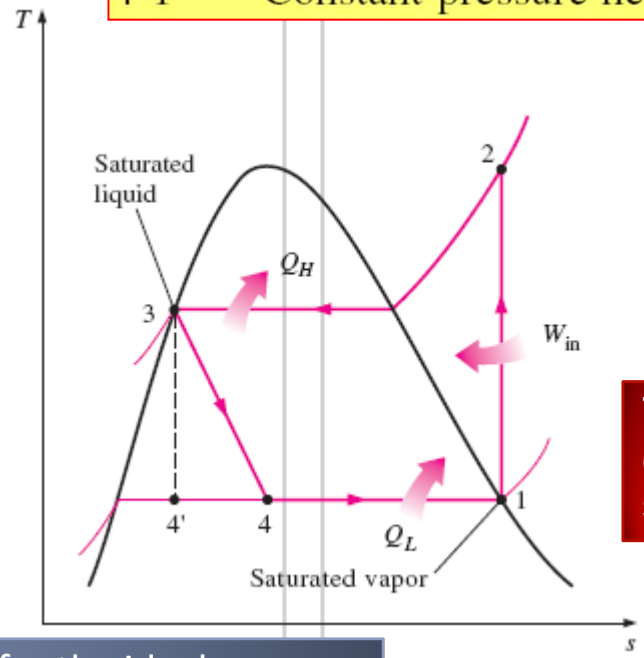

This is the most widely used cycle for refrigerators, A-C systems, and heat pumps.

Schematic and *T-s* diagram for the ideal vapor-compression refrigeration cycle.

The ideal vapor-compression refrigeration cycle involves an irreversible (throttling) process to make it a more realistic model for the actual systems.

Replacing the expansion valve by a turbine is not practical since the added benefits cannot justify the added cost and complexity.

Steady-flow energy balance

$$(q_{in} - q_{out}) + (w_{in} - w_{out}) = h_e - h_i$$

$$COP_R = \frac{q_L}{w_{net,\,in}} = \frac{h_1 - h_4}{h_2 - h_1}$$

$$COP_{HP} = \frac{q_H}{w_{net,\,in}} = \frac{h_2 - h_3}{h_2 - h_1}$$

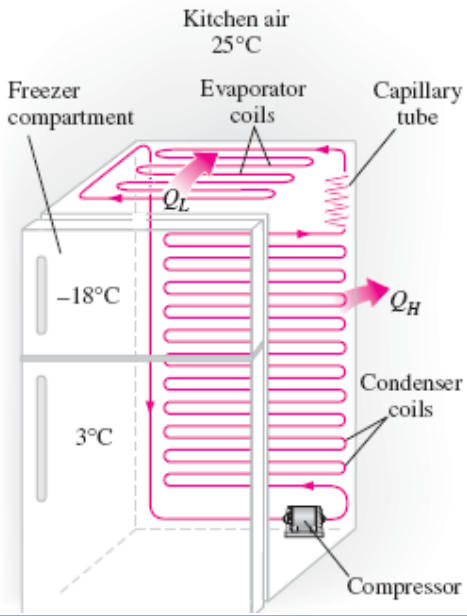

An ordinary household refrigerator.

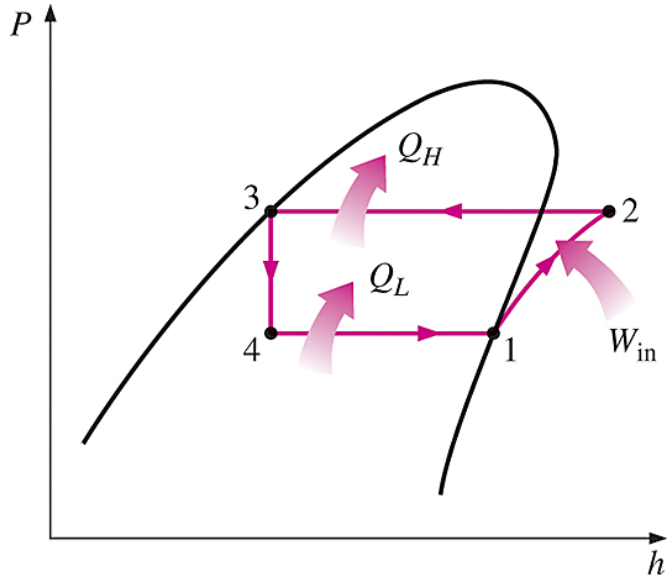

The *P-h* diagram of an ideal vapor-compression refrigeration cycle.

Vapor-compression refrigeration cycle

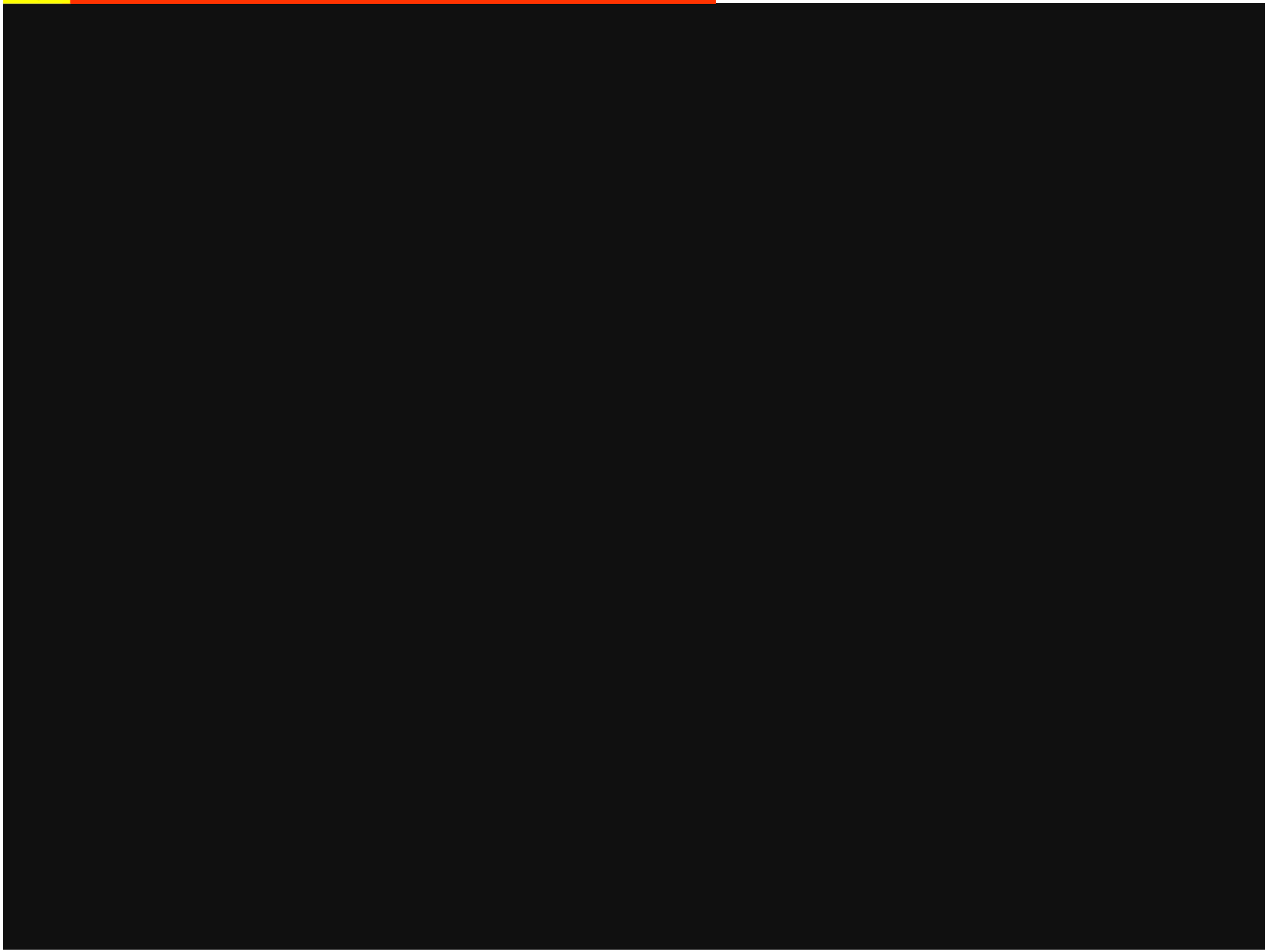

EXAMPLE 11-1

A refrigerator uses refrigerant-134a as the working fluid and operates on an ideal vapor-compression refrigeration cycle between 0.14 and 0.8 MPa. If the mass flow rate of the refrigerant is 0.05 kg/s, determine

(a) the rate of heat removal from the refrigerated space and the power input to the compressor,
(b) the rate of heat rejection to the environment, and
(c) the COP of the refrigerator.

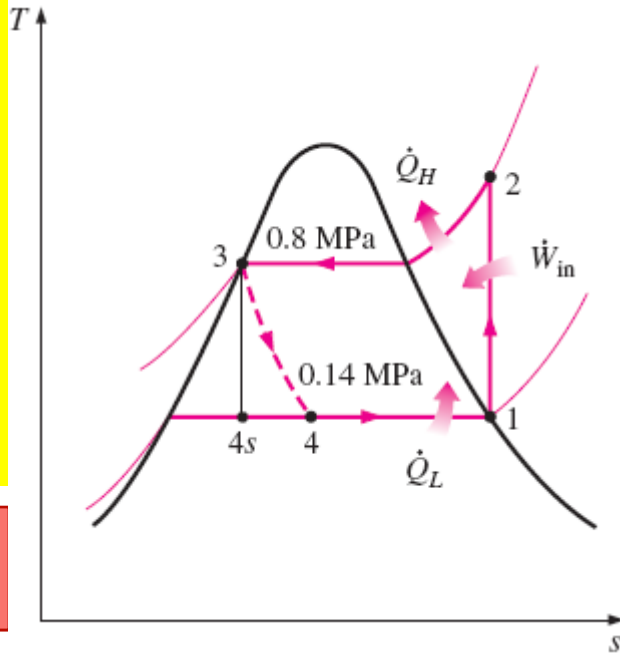

Assumptions **1** Steady operating conditions exist.
2 Kinetic and potential energy changes are negligible.

$$P_1 = 0.14 \text{ MPa} \longrightarrow h_1 = h_{g\,@\,0.14\text{ MPa}} = 239.16 \text{ kJ/kg}$$
$$s_1 = s_{g\,@\,0.14\text{ MPa}} = 0.94456 \text{ kJ/kg} \cdot \text{K}$$

$$\left.\begin{aligned} P_2 &= 0.8 \text{ MPa} \\ s_2 &= s_1 \end{aligned}\right\} \quad h_2 = 275.39 \text{ kJ/kg}$$
$$P_3 = 0.8 \text{ MPa} \longrightarrow h_3 = h_{f\,@\,0.8\text{ MPa}} = 95.47 \text{ kJ/kg}$$
$$h_4 \cong h_3 \text{ (throttling)} \longrightarrow h_4 = 95.47 \text{ kJ/kg}$$

(*a*) The rate of heat removal from the refrigerated space and the power input to the compressor are determined from their definitions:

$$\dot{Q}_L = \dot{m}(h_1 - h_4) = (0.05\ \text{kg/s})[(239.16 - 95.47)\ \text{kJ/kg}] = \mathbf{7.18\ kW}$$

$$\dot{W}_{in} = \dot{m}(h_2 - h_1) = (0.05\ \text{kg/s})[(275.39 - 239.16)\ \text{kJ/kg}] = \mathbf{1.81\ kW}$$

(*b*) The rate of heat rejection from the refrigerant to the environment is

$$\dot{Q}_H = \dot{m}(h_2 - h_3) = (0.05\ \text{kg/s})[(275.39 - 95.47)\ \text{kJ/kg}] = \mathbf{9.0\ kW}$$

$$\dot{Q}_H = \dot{Q}_L + \dot{W}_{in} = 7.18 + 1.81 = 8.99\ \text{kW}$$

(*c*) The coefficient of performance of the refrigerator is

$$\text{COP}_R = \frac{\dot{Q}_L}{\dot{W}_{in}} = \frac{7.18\ \text{kW}}{1.81\ \text{kW}} = \mathbf{3.97}$$

Discussion *It would be interesting to see what happens if the throttling valve* were replaced by an isentropic turbine. The enthalpy at state 4s (the turbine exit with P_{4s}=0.14 MPa, and s_{4s}=s_3=0.35404 kJ/kg·K) is 88.94 kJ/kg, and the turbine would produce 0.33 kW of power. This would decrease the power input to the refrigerator from 1.81 to 1.48 kW and increase the rate of heat removal from the refrigerated space from 7.18 to 7.51 kW. As a result, the COP of the refrigerator would increase from 3.97 to 5.07, an increase of 28 %.

ACTUAL VAPOR-COMPRESSION REFRIGERATION CYCLE

An actual vapor-compression refrigeration cycle differs from the ideal one in several ways, owing mostly to the irreversibilities that occur in various components, mainly due to fluid friction (causes pressure drops) and heat transfer to or from the surroundings. The COP decreases as a result of irreversibilities.

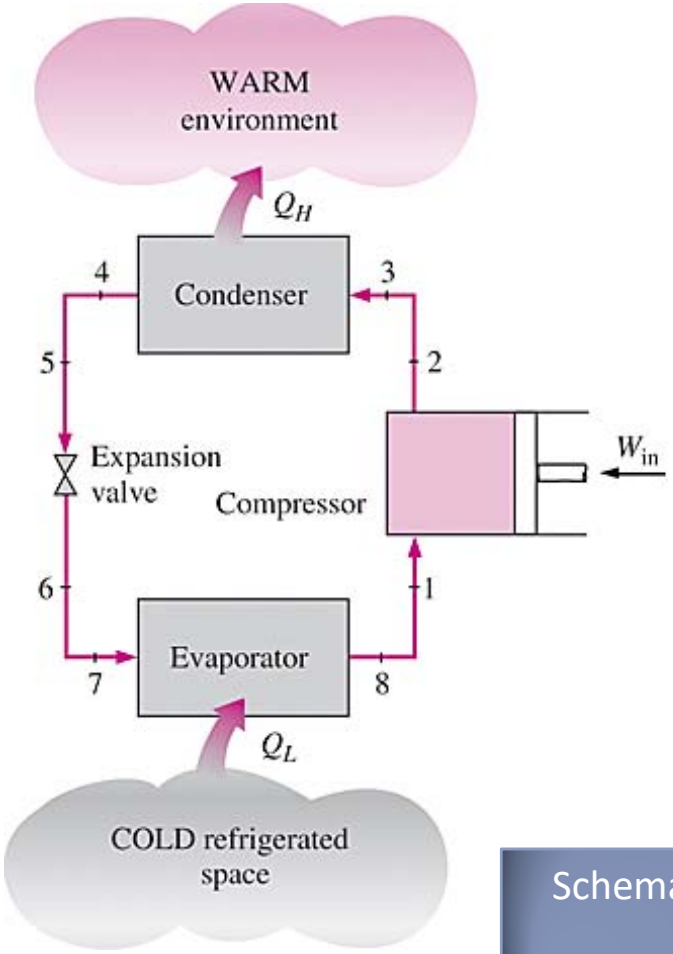

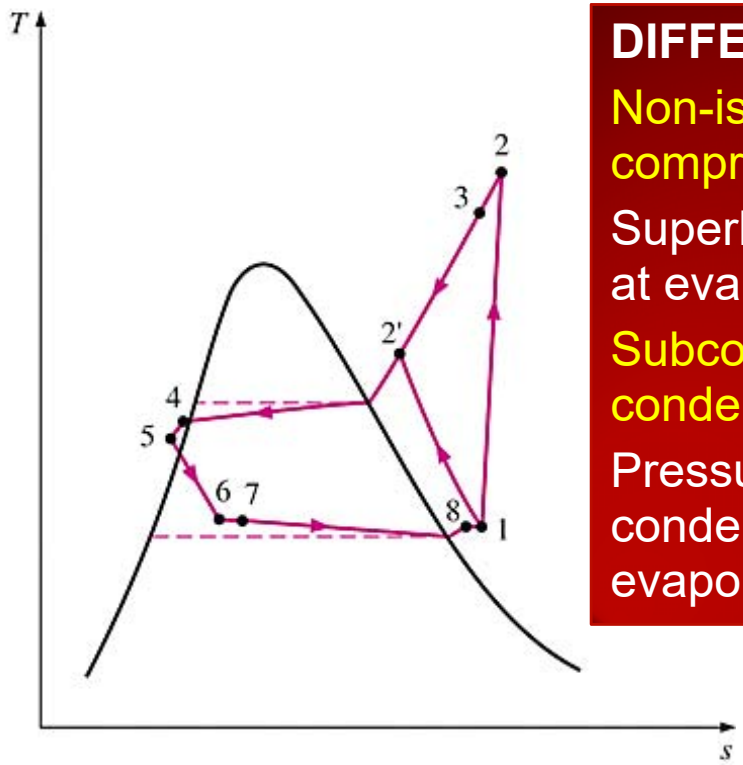

DIFFERENCES

Non-isentropic compression

Superheated vapor at evaporator exit

Subcooled liquid at condenser exit

Pressure drops in condenser and evaporator

Schematic and *T-s* diagram for the actual vapor-compression refrigeration cycle.

EXAMPLE 11-2

Refrigerant-134a enters the compressor of a refrigerator as superheated vapor at 0.14 MPa and -10°C at a rate of 0.05 kg/s and leaves at 0.8 MPa and 50°C. The refrigerant is cooled in the condenser to 26°C and 0.72 MPa and is throttled to 0.15 MPa. Disregarding any heat transfer and pressure drops in the connecting lines between the components, determine

(a) the rate of heat removal from the refrigerated space and the power input to the compressor,
(b) the isentropic efficiency of the compressor, and
(c) the coefficient of performance of the refrigerator.

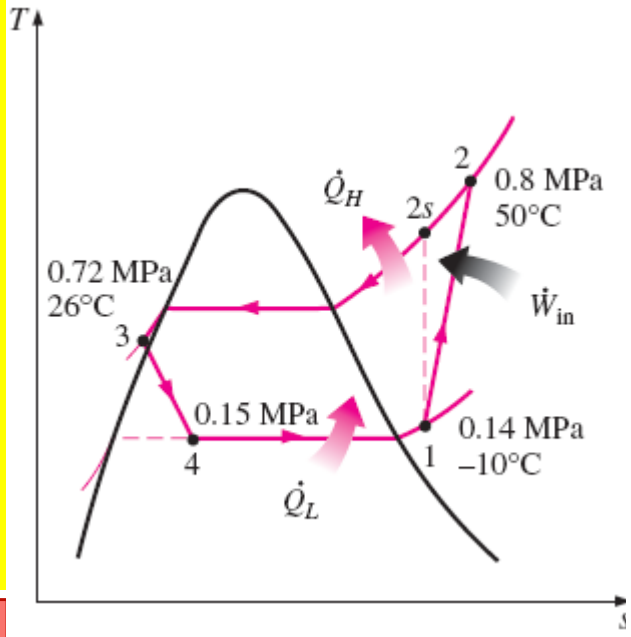

Assumptions **1** Steady operating conditions exist.
2 Kinetic and potential energy changes are negligible.

$$\left.\begin{aligned} P_1 &= 0.14 \text{ MPa} \\ T_1 &= -10°\text{C} \end{aligned}\right\} \qquad h_1 = 246.36 \text{ kJ/kg}$$

$$\left.\begin{aligned} P_2 &= 0.8 \text{ MPa} \\ T_2 &= 50°\text{C} \end{aligned}\right\} \qquad h_2 = 286.69 \text{ kJ/kg}$$

$$\left.\begin{aligned} P_3 &= 0.72 \text{ MPa} \\ T_3 &= 26°\text{C} \end{aligned}\right\} \qquad h_3 \cong h_{f\,@\,26°\text{C}} = 87.83 \text{ kJ/kg}$$

$$h_4 \cong h_3 \text{ (throttling)} \longrightarrow h_4 = 87.83 \text{ kJ/kg}$$

(*a*) The rate of heat removal from the refrigerated space and the power input to the compressor are determined from their definitions:

$$\dot{Q}_L = \dot{m}(h_1 - h_4) = (0.05\ \text{kg/s})[(246.36 - 87.83)\ \text{kJ/kg}] = \mathbf{7.93\ kW}$$

$$\dot{W}_{in} = \dot{m}(h_2 - h_1) = (0.05\ \text{kg/s})[(286.69 - 246.36)\ \text{kJ/kg}] = \mathbf{2.02\ kW}$$

(*b*) The isentropic efficiency of the compressor is determined from

$$\eta_C \cong \frac{h_{2s} - h_1}{h_2 - h_1} \qquad \eta_C = \frac{284.21 - 246.36}{286.69 - 246.36} = \mathbf{0.939\ or\ 93.9\%}$$

(*c*) The coefficient of performance of the refrigerator is

$$\text{COP}_R = \frac{\dot{Q}_L}{\dot{W}_{in}} = \frac{7.93\ \text{kW}}{2.02\ \text{kW}} = \mathbf{3.93}$$

Discussion *This problem is identical to the one worked out in Example* 11–1, except that the refrigerant is slightly superheated at the compressor inlet and subcooled at the condenser exit. Also, the compressor is not isentropic. As a result, the heat removal rate from the refrigerated space increases (by 10.4 %), but the power input to the compressor increases even more (by 11.6 %). Consequently, the COP of the refrigerator decreases from 3.97 to 3.93.

SELECTING THE RIGHT REFRIGERANT

- Several refrigerants may be used in refrigeration systems such as chlorofluorocarbons (CFCs), ammonia, hydrocarbons (propane, ethane, ethylene, etc.), carbon dioxide, air (in the air-conditioning of aircraft), and even water.
- R-11, R-12, R-22, R-134a, and R-502 account for over 90 percent of the market.
- The industrial and heavy-commercial sectors use *ammonia* (it is toxic).
- R-11 is used in large-capacity water chillers serving A-C systems in buildings.
- R-134a (replaced R-12, which damages ozone layer) is used in domestic refrigerators and freezers, as well as automotive air conditioners.
- R-22 is used in window air conditioners, heat pumps, air conditioners of commercial buildings, and large industrial refrigeration systems, and offers strong competition to ammonia.
- R-502 (a blend of R-115 and R-22) is the dominant refrigerant used in commercial refrigeration systems such as those in supermarkets.
- CFCs allow more ultraviolet radiation into the earth's atmosphere by destroying the protective ozone layer and thus contributing to the greenhouse effect that causes global warming. Fully halogenated CFCs (such as R-11, R-12, and R-115) do the most damage to the ozone layer. Refrigerants that are friendly to the ozone layer have been developed.
- Two important parameters that need to be considered in the selection of a refrigerant are the temperatures of the two media (the refrigerated space and the environment) with which the refrigerant exchanges heat.

HEAT PUMP SYSTEMS

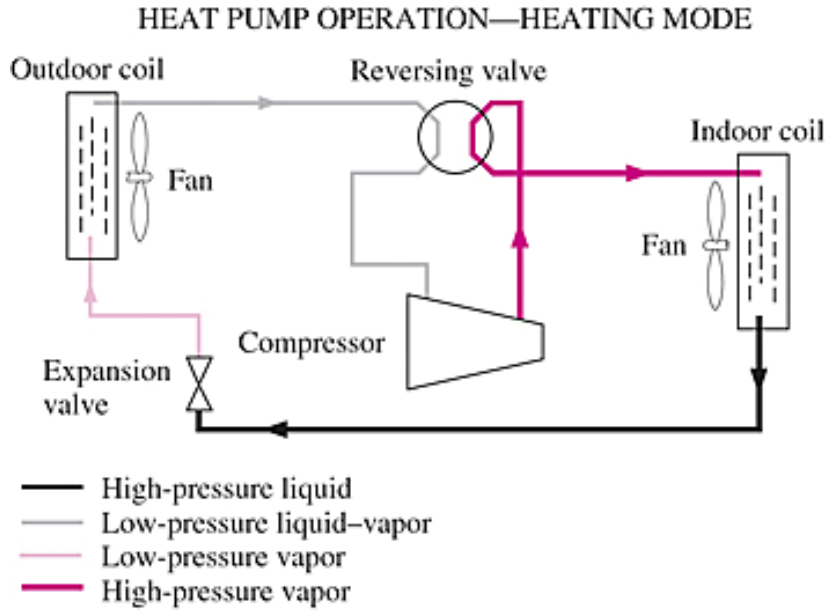

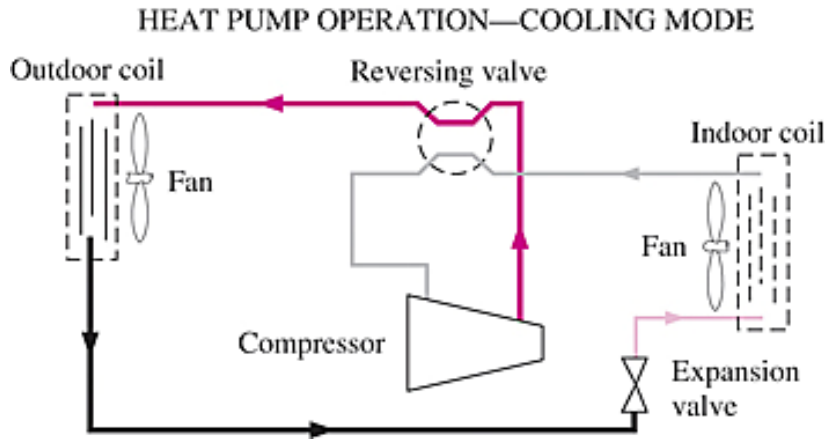

A heat pump can be used to heat a house in winter and to cool it in summer.

The most common energy source for heat pumps is atmospheric air (air-to- air systems).

Water-source systems usually use well water and ground-source (geothermal) heat pumps use earth as the energy source. They typically have higher COPs but are more complex and more expensive to install.

Both the capacity and the efficiency of a heat pump fall significantly at low temperatures. Therefore, most air-source heat pumps require a supplementary heating system such as electric resistance heaters or a gas furnace.

Heat pumps are most competitive in areas that have a large cooling load during the cooling season and a relatively small heating load during the heating season. In these areas, the heat pump can meet the entire cooling and heating needs of residential or commercial buildings.

INNOVATIVE VAPOR-COMPRESSION REFRIGERATION SYSTEMS

- The simple vapor-compression refrigeration cycle is the most widely used refrigeration cycle, and it is adequate for most refrigeration applications.
- The ordinary vapor-compression refrigeration systems are simple, inexpensive, reliable, and practically maintenance-free.
- However, for large industrial applications *efficiency,* not simplicity, is the major concern.
- Also, for some applications the simple vapor-compression refrigeration cycle is inadequate and needs to be modified.
- For moderately and very low temperature applications some innovative refrigeration systems are used. The following cycles will be discussed:
  - Cascade refrigeration systems
  - Multistage compression refrigeration systems
  - Multipurpose refrigeration systems with a single compressor
  - Liquefaction of gases

Cascade Refrigeration Systems

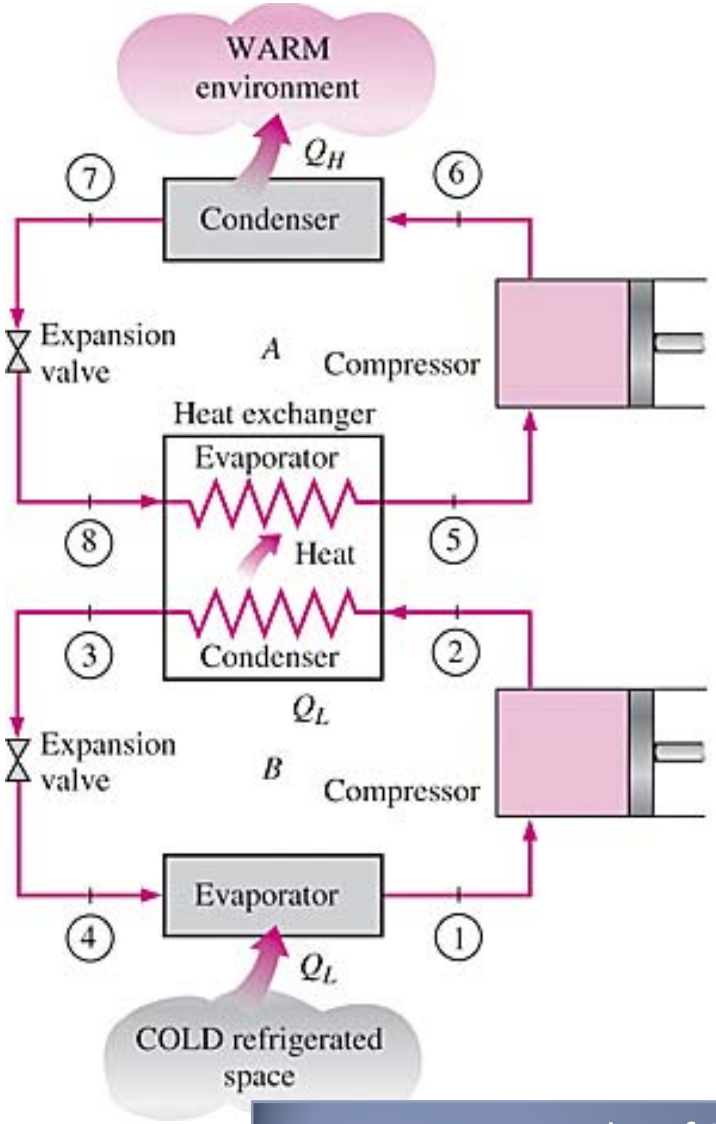

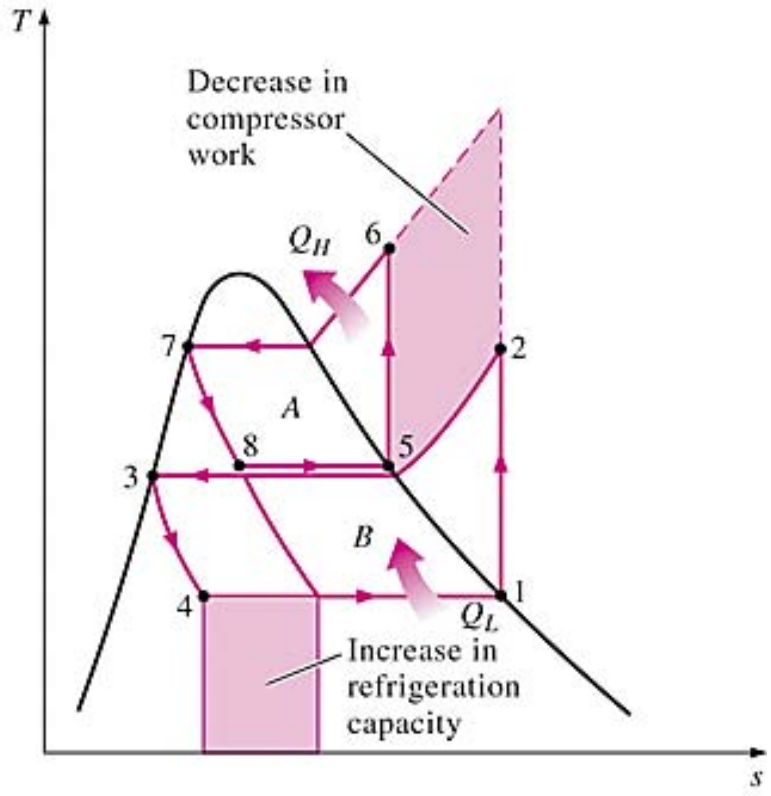

A two-stage cascade refrigeration system with the same refrigerant in both stages.

Some industrial applications require moderately low temperatures, and the temperature range they involve may be too large for a single vapor-compression refrigeration cycle to be practical. The solution is **cascading.**

$$\dot{m}_A(h_5 - h_8) = \dot{m}_B(h_2 - h_3) \longrightarrow \frac{\dot{m}_A}{\dot{m}_B} = \frac{h_2 - h_3}{h_5 - h_8}$$

$$\mathrm{COP}_{\mathrm{R,\ cascade}} = \frac{\dot{Q}_L}{\dot{W}_{\mathrm{net,\ in}}} = \frac{\dot{m}_B(h_1 - h_4)}{\dot{m}_A(h_6 - h_5) + \dot{m}_B(h_2 - h_1)}$$

Cascading improves the COP of a refrigeration system.

Some systems use three or four stages of cascading.

Reciproating Compression

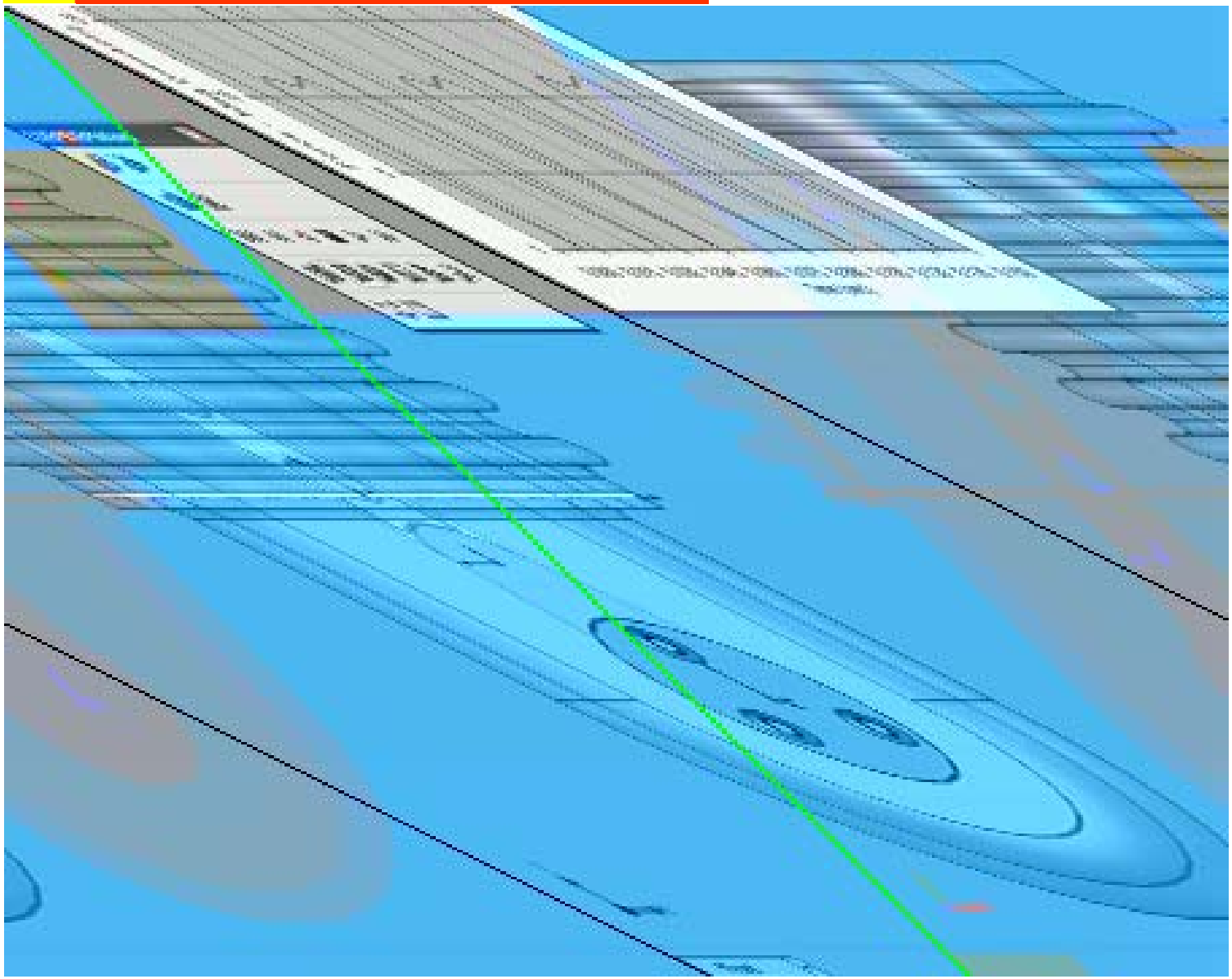

EXAMPLE 11-3

Consider a two-stage cascade refrigeration system operating between the pressure limits of 0.8 and 0.14 MPa. Each stage operates on an ideal vapor compression refrigeration cycle with refrigerant-134a as the working fluid. Heat rejection from the lower cycle to the upper cycle takes place in an adiabatic counterflow heat exchanger where both streams enter at about 0.32 MPa. (In practice, the working fluid of the lower cycle will be at a higher pressure and temperature in the heat exchanger for effective heat transfer.) If the mass flow rate of the refrigerant through the upper cycle is 0.05 kg/s, determine

(a) the mass flow rate of the refrigerant through the lower cycle,
(b) the rate of heat removal from the refrigerated space and the power input to the compressor, and
(c) the coefficient of performance of this cascade refrigerator.

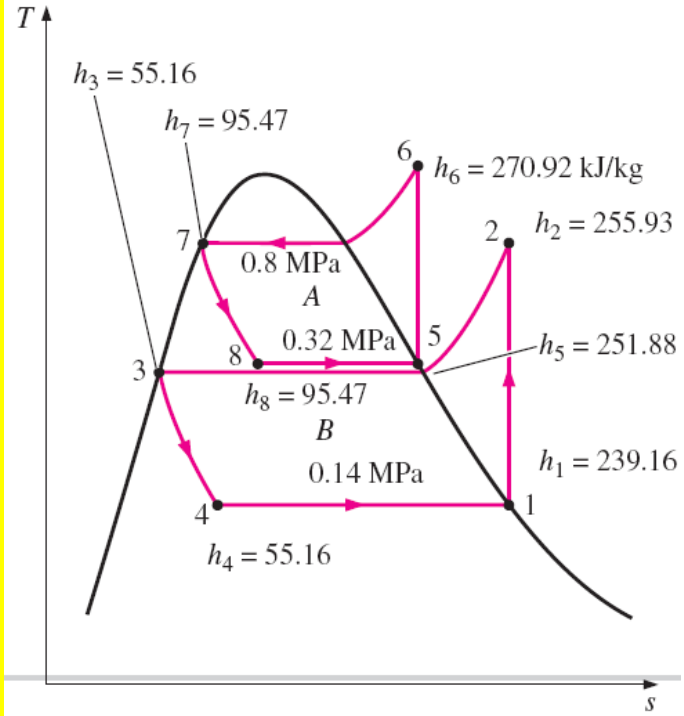

Assumptions **1** Steady operating conditions exist.
2 Kinetic and potential energy changes are negligible.
3 The heat exchanger is adiabatic.

(*a*) The mass flow rate of the refrigerant through the lower cycle is determined from the steady-flow energy balance on the adiabatic heat exchanger,

$$\dot{E}_{\text{out}} = \dot{E}_{\text{in}} \longrightarrow \dot{m}_A h_5 + \dot{m}_B h_3 = \dot{m}_A h_8 + \dot{m}_B h_2$$

$$\dot{m}_A(h_5 - h_8) = \dot{m}_B(h_2 - h_3)$$

$$(0.05\ \text{kg/s})[(251.88 - 95.47)\ \text{kJ/kg}] = \dot{m}_B[(255.93 - 55.16)\ \text{kJ/kg}]$$

$$\dot{m}_B = \mathbf{0.039\ kg/s}$$

(*b*) The rate of heat removal by a cascade cycle is the rate of heat absorption in the evaporator of the lowest stage. The power input to a cascade cycle is the sum of the power inputs to all of the compressors:

$$\dot{Q}_L = \dot{m}_B(h_1 - h_4) = (0.039\ \text{kg/s})[(239.16 - 55.16)\ \text{kJ/kg}] = \mathbf{7.18\ kW}$$

$$\dot{W}_{\text{in}} = \dot{W}_{\text{comp I, in}} + \dot{W}_{\text{comp II, in}} = \dot{m}_A(h_6 - h_5) + \dot{m}_B(h_2 - h_1)$$

$$= (0.05\ \text{kg/s})[(270.92 - 251.88)\ \text{kJ/kg}] + (0.039\ \text{kg/s})[(255.93 - 239.16)\ \text{kJ/kg}] = \mathbf{1.61\ kW}$$

(*c*) The COP of a refrigeration system is the ratio of the refrigeration rate to the net power input:

$$\text{COP}_{\text{R}} = \frac{\dot{Q}_L}{\dot{W}_{\text{net, in}}} = \frac{7.18\ \text{kW}}{1.61\ \text{kW}} = \mathbf{4.46}$$

Multistage Compression Refrigeration Systems

When the fluid used throughout the cascade refrigeration system is the same, the heat exchanger between the stages can be replaced by a mixing chamber (called a *flash chamber*) since it has better heat transfer characteristics.

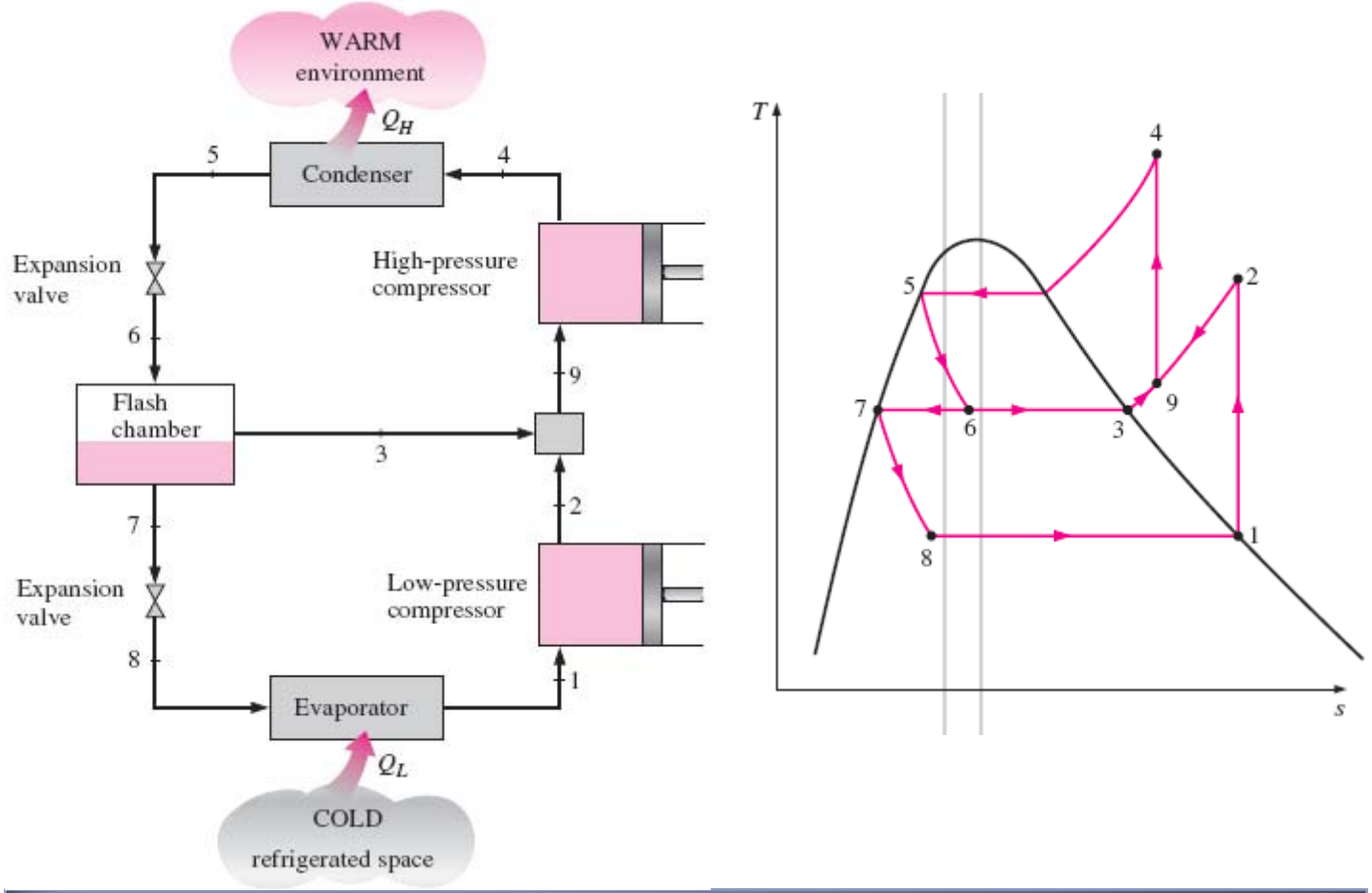

A two-stage compression refrigeration system with a flash chamber.

EXAMPLE 11-4

Consider a two-stage compression refrigeration system operating between the pressure limits of 0.8 and 0.14 MPa. The working fluid is refrigerant-134a. The refrigerant leaves the condenser as a saturated liquid and is throttled to a flash chamber operating at 0.32 MPa. Part of the refrigerant evaporates during this flashing process, and this vapor is mixed with the refrigerant leaving the low-pressure compressor. The mixture is then compressed to the condenser pressure by the high-pressure compressor. The liquid in the flash chamber is throttled to the evaporator pressure and cools the refrigerated space as it vaporizes in the evaporator. Assuming the refrigerant leaves the evaporator as a saturated vapor and both compressors are isentropic, determine (*a*) the fraction of the refrigerant that evaporates as it is throttled to the flash chamber, (*b*) the amount of heat removed from the refrigerated space and the compressor work per unit mass of refrigerant flowing through the condenser, and (*c*) the coefficient of performance.

Assumptions **1** Steady operating conditions exist.
2 Kinetic and potential energy changes are negligible.
3 The flash chamber is adiabatic.

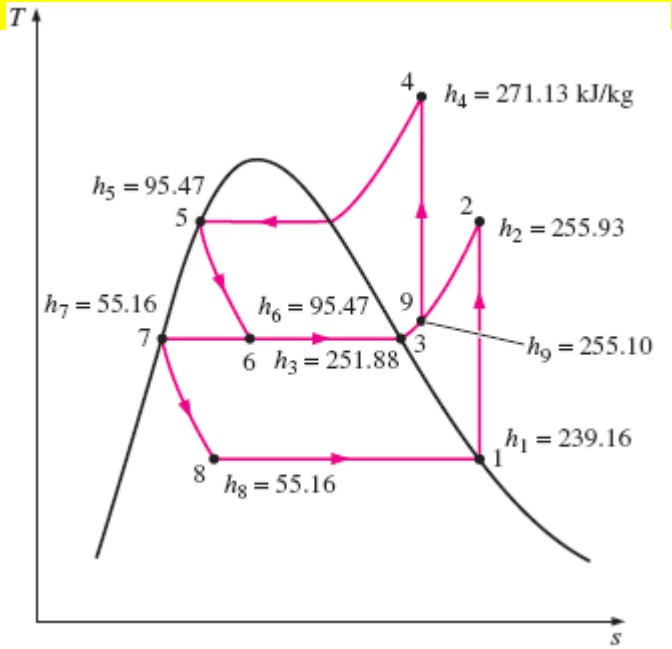

(*a*) The fraction of the refrigerant that evaporates as it is throttled to the flash chamber is simply the quality at state 6, which is

$$x_6 = \frac{h_6 - h_f}{h_{fg}} = \frac{95.47 - 55.16}{196.71} = \mathbf{0.2049}$$

(*b*) The amount of heat removed from the refrigerated space and the compressor work input per unit mass of refrigerant flowing through the condenser are

$$q_L = (1 - x_6)(h_1 - h_8)$$
$$= (1 - 0.2049)[(239.16 - 55.16)\ \text{kJ/kg}] = \mathbf{146.3\ kJ/kg}$$

$$w_{in} = w_{comp\ I,\ in} + w_{comp\ II,\ in} = (1 - x_6)(h_2 - h_1) + (1)(h_4 - h_9)$$

The enthalpy at state 9 is determined from an energy balance on the mixing chamber,

$$\dot{E}_{out} = \dot{E}_{in}$$
$$\sum \dot{m}_e h_e = \sum \dot{m}_i h_i$$

$$(1)h_9 = x_6 h_3 + (1 - x_6)h_2$$
$$h_9 = (0.2049)(251.88) + (1 - 0.2049)(255.93) = 255.10\ \text{kJ/kg}$$

$$w_{in} = (1 - 0.2049)[(255.93 - 239.16)\ \text{kJ/kg}] + (274.48 - 255.10)\ \text{kJ/kg}$$
$$= \mathbf{32.71\ kJ/kg}$$

(c) The coefficient of performance is

$$\mathrm{COP_R} = \frac{q_L}{w_{\mathrm{in}}} = \frac{146.3\ \mathrm{kJ/kg}}{32.71\ \mathrm{kJ/kg}} = \mathbf{4.47}$$

Discussion This problem was worked out in Example 11–1 for a single-stage refrigeration system (COP=3.97) and in Example 11–3 for a two-stage cascade refrigeration system (COP= 4.46). Notice that the COP of the refrigeration system increased considerably relative to the single-stage compression but did not change much relative to the two-stage cascade compression.

Multipurpose Refrigeration Systems with a Single Compressor

Some applications require refrigeration at more than one temperature. A practical and economical approach is to route all the exit streams from the evaporators to a single compressor and let it handle the compression process for the entire system.

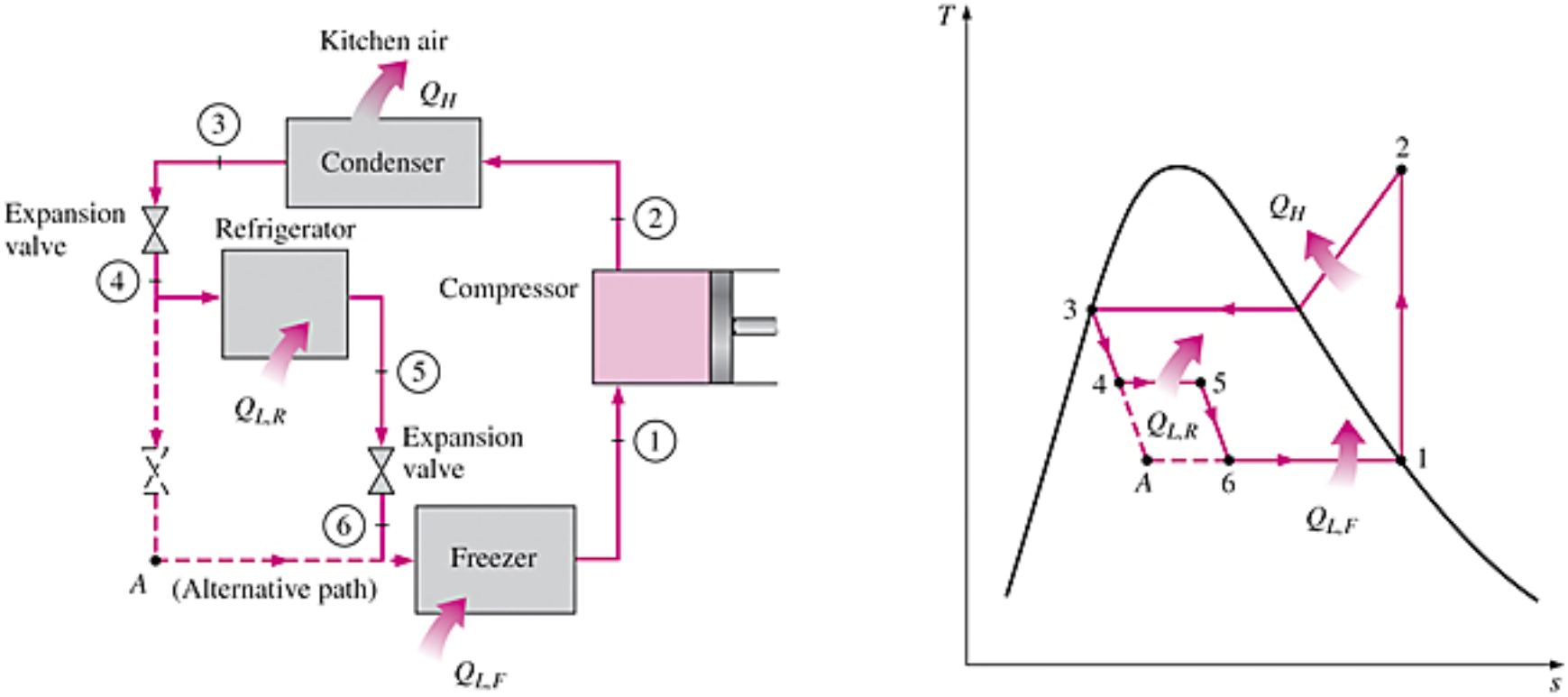

Schematic and *T-s* diagram for a refrigerator–freezer unit with one compressor.

Liquefaction of Gases

Many important scientific and engineering processes at cryogenic temperatures (below about 100°C) depend on liquefied gases including the separation of oxygen and nitrogen from air, preparation of liquid propellants for rockets, the study of material properties at low temperatures, and the study of superconductivity.

The storage (i.e., hydrogen) and transportation of some gases (i.e., natural gas) are done after they are liquefied at very low temperatures. Several innovative cycles are used for the liquefaction of gases.

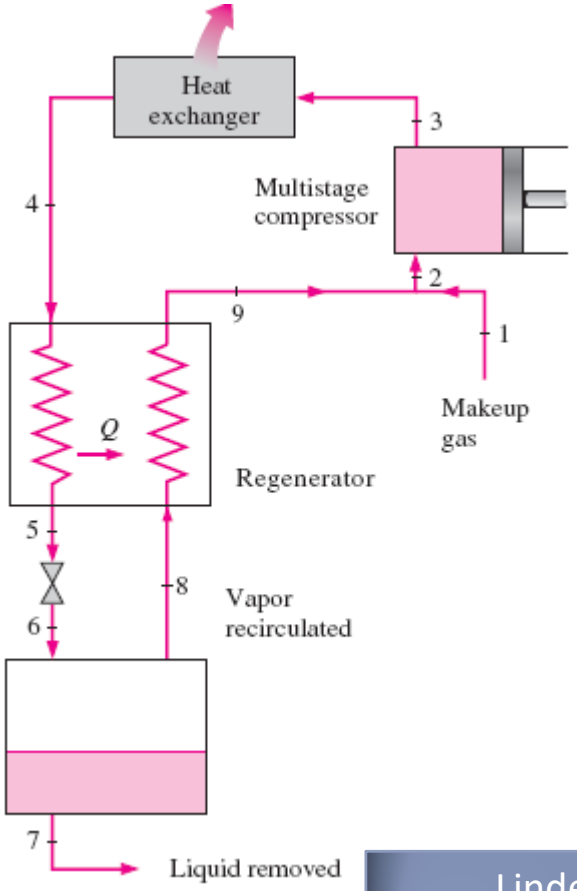

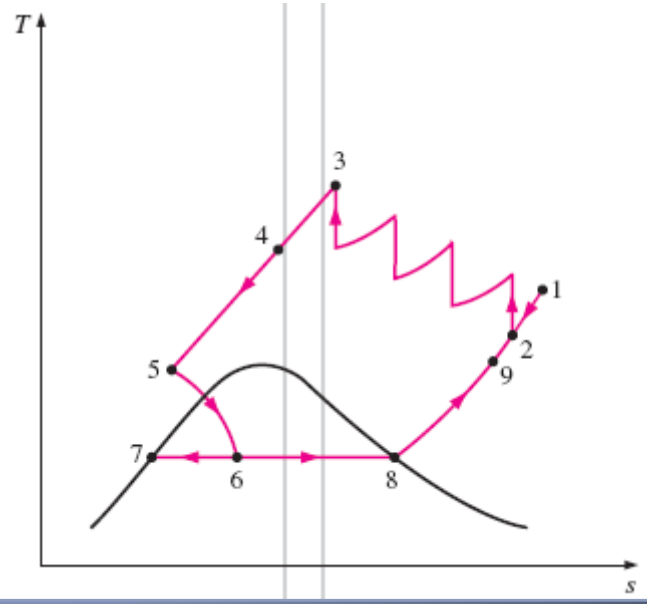

Linde-Hampson system for liquefying gases.

GAS REFRIGERATION CYCLES

The reversed Brayton cycle (the gas refrigeration cycle) can be used for refrigeration.

$$\mathrm{COP_R} = \frac{q_L}{w_{\text{net, in}}} = \frac{q_L}{w_{\text{comp, in}} - w_{\text{turb, out}}}$$

$$q_L = h_1 - h_4$$
$$w_{\text{turb, out}} = h_3 - h_4$$
$$w_{\text{comp, in}} = h_2 - h_1$$

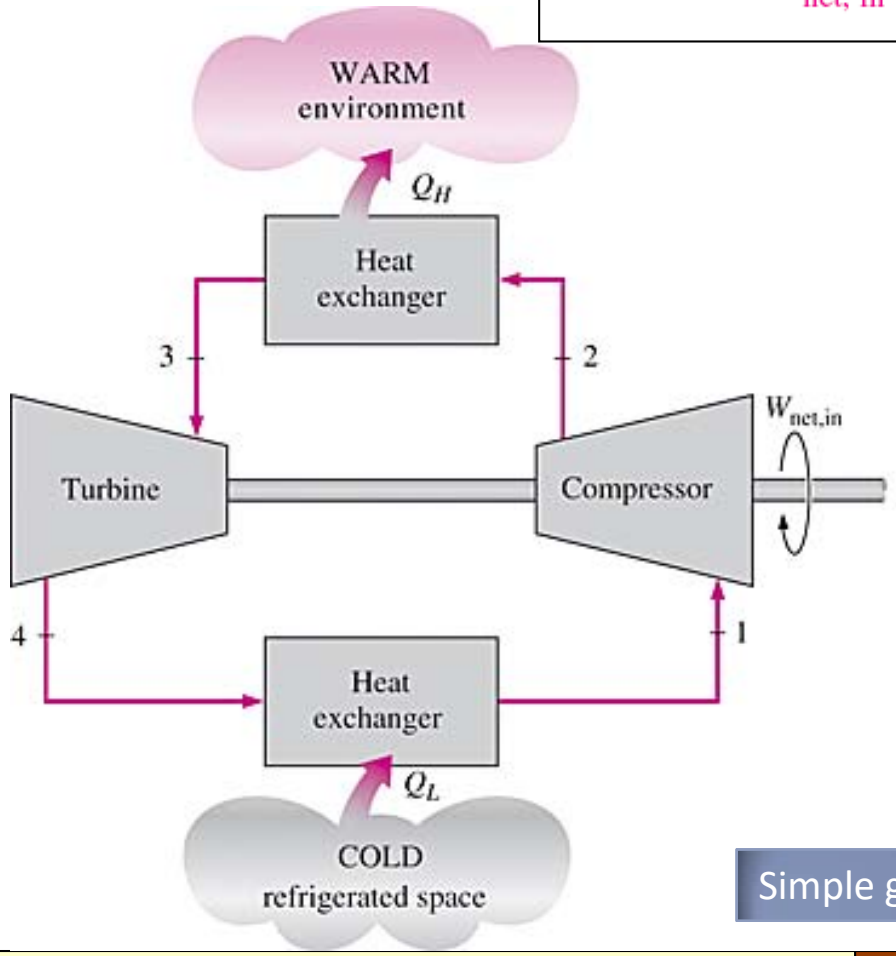

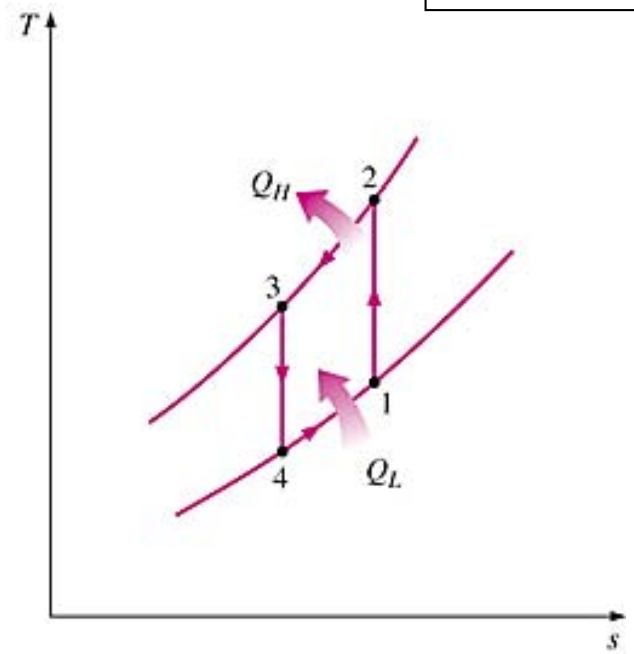

Simple gas refrigeration cycle.

The gas refrigeration cycles have lower COPs relative to the vapor-compression refrigeration cycles or the reversed Carnot cycle.

The reversed Carnot cycle consumes a fraction of the net work (area 1*A*3*B*) but produces a greater amount of refrigeration (triangular area under *B*1).

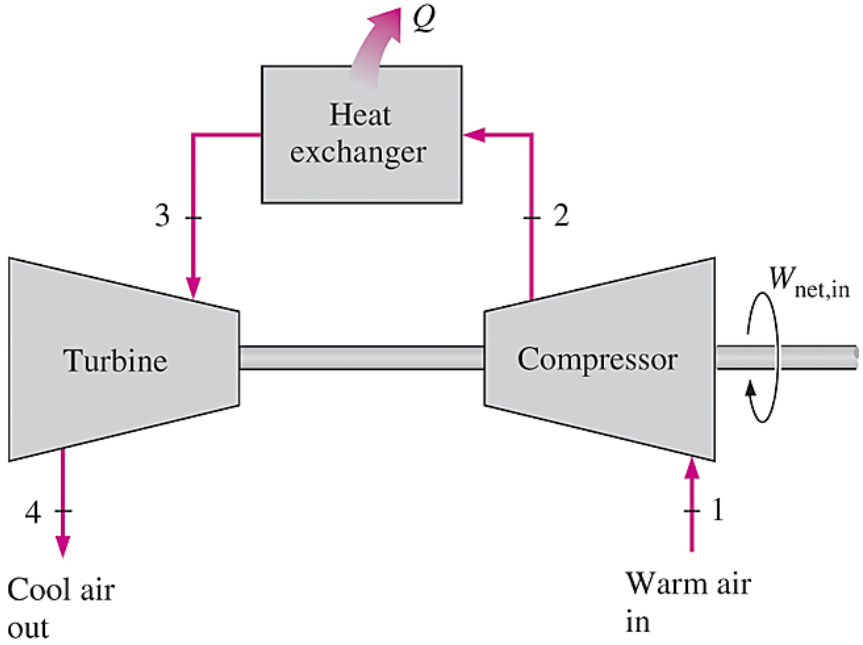

An open-cycle aircraft cooling system.

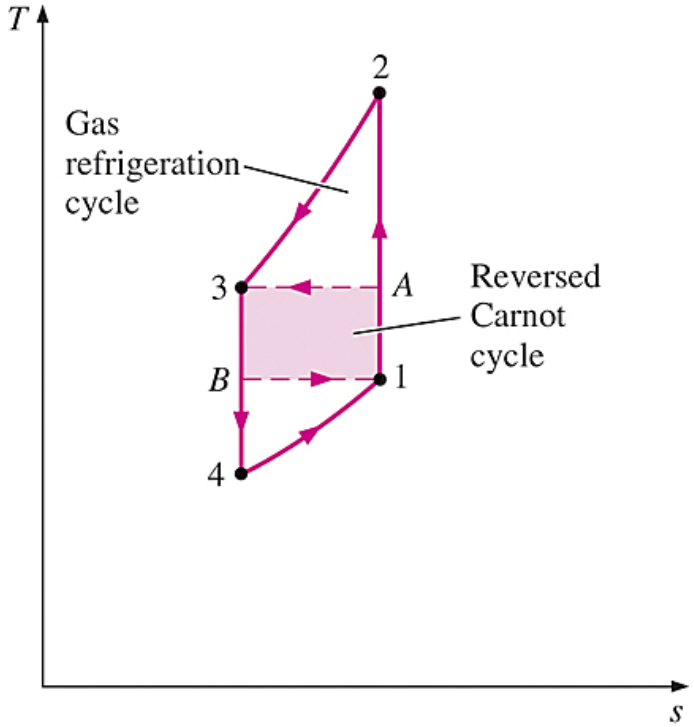

Despite their relatively low COPs, the gas refrigeration cycles involve simple, lighter components, which make them suitable for aircraft cooling, and they can incorporate regeneration

Without regeneration, the lowest turbine inlet temperature is T_0, the temperature of the surroundings or any other cooling medium.

With regeneration, the high-pressure gas is further cooled to T_4 before expanding in the turbine.

Lowering the turbine inlet temperature automatically lowers the turbine exit temperature, which is the minimum temperature in the cycle.

Extremely low temperatures can be achieved by repeating regeneration process.

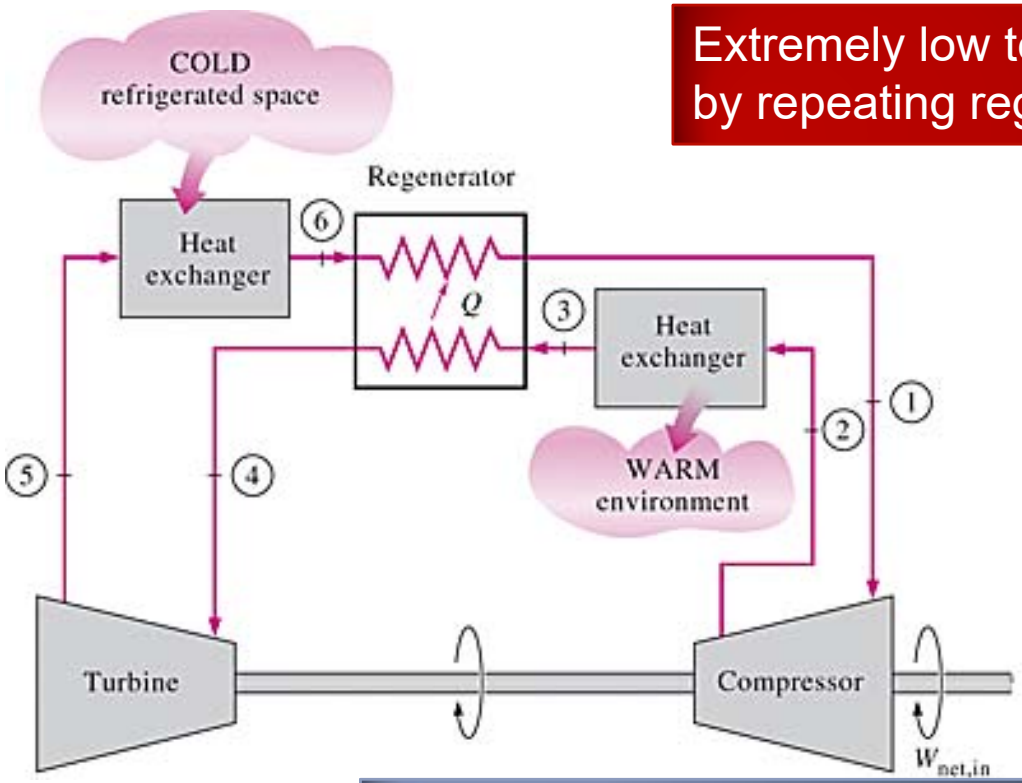

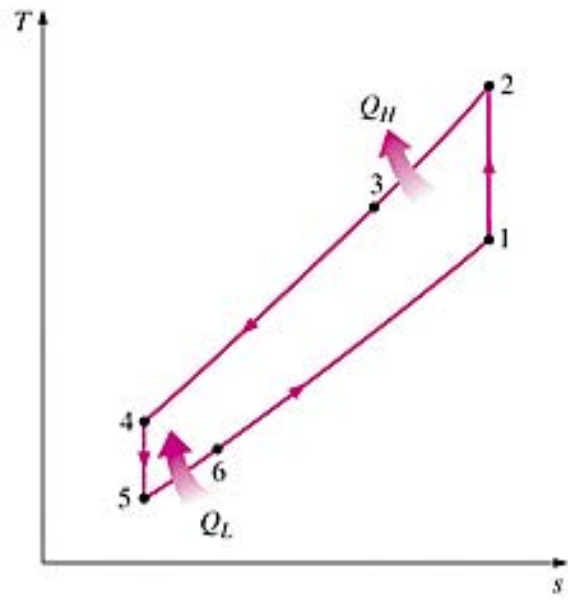

Gas refrigeration cycle with regeneration.

ABSORPTION REFRIGERATION SYSTEMS

When there is a source of inexpensive thermal energy at a temperature of 100 to 200°C is **absorption refrigeration**.

Some examples include geothermal energy, solar energy, and waste heat from cogeneration or process steam plants, and even natural gas when it is at a relatively low price.

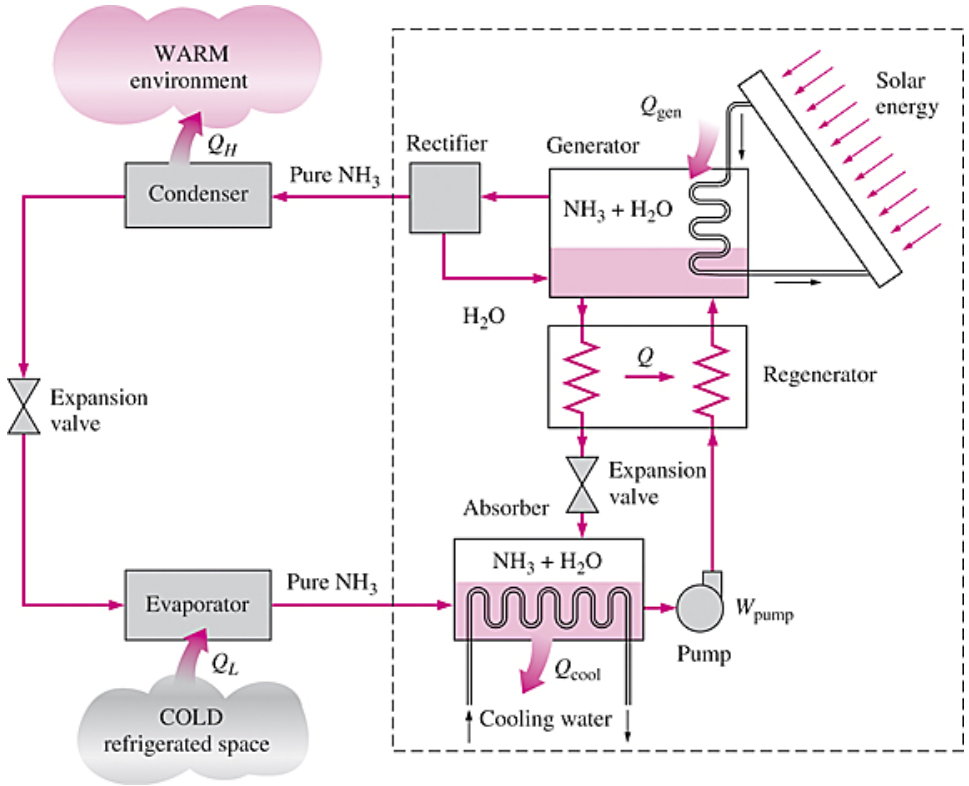

Ammonia absorption refrigeration cycle.

- Absorption refrigeration systems (ARS) involve the absorption of a *refrigerant* by a *transport medium*.
- The most widely used system is the ammonia–water system, where ammonia (NH_3) serves as the refrigerant and water (H_2O) as the transport medium.
- Other systems include water–lithium bromide and water–lithium chloride systems, where water serves as the refrigerant. These systems are limited to applications such as A-C where the minimum temperature is above the freezing point of water.
- Compared with vapor-compression systems, ARS have one major advantage: A liquid is compressed instead of a vapor and as a result the work input is very small (on the order of one percent of the heat supplied to the generator) and often neglected in the cycle analysis.
- ARS are often classified as ***heat-driven systems***.
- ARS are much more expensive than the vapor-compression refrigeration systems. They are more complex and occupy more space, they are much less efficient thus requiring much larger cooling towers to reject the waste heat, and they are more difficult to service since they are less common.
- Therefore, ARS should be considered only when the unit cost of thermal energy is low and is projected to remain low relative to electricity.
- ARS are primarily used in large commercial and industrial installations.

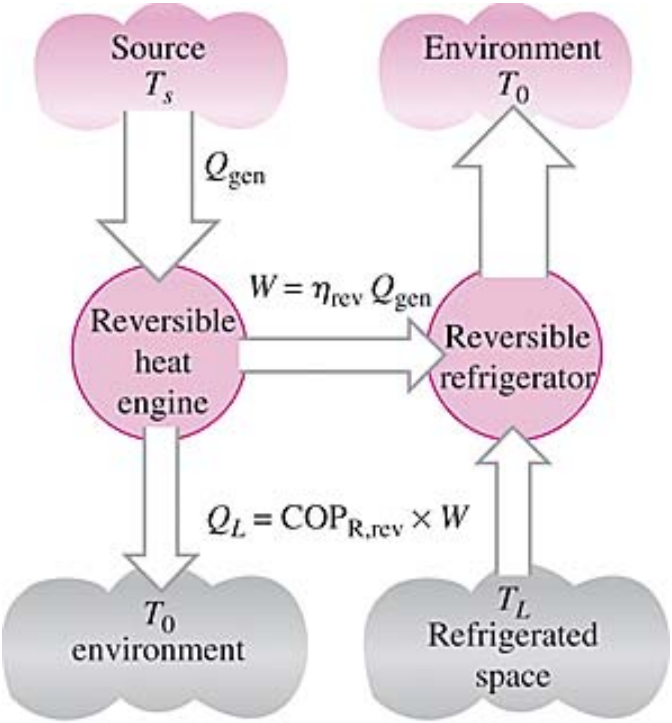

$$W = \eta_{rev} Q_{gen} = \left(1 - \frac{T_0}{T_s}\right) Q_{gen}$$

$$Q_L = COP_{R,rev} W = \left(\frac{T_L}{T_0 - T_L}\right) W$$

$$COP_{rev,absorption} = \frac{Q_L}{Q_{gen}} = \left(1 - \frac{T_0}{T_s}\right)\left(\frac{T_L}{T_0 - T_L}\right)$$

Determining the maximum COP of an absorption refrigeration system.

$$COP_R = \frac{\text{Desired output}}{\text{Required input}} = \frac{Q_L}{Q_{gen} + W_{pump,\,in}} \cong \frac{Q_L}{Q_{gen}}$$

$$COP_{rev,\,absorption} = \frac{Q_L}{Q_{gen}}$$

$$= \eta_{th,\,rev} COP_{R,\,rev} = \left(1 - \frac{T_0}{T_s}\right)\left(\frac{T_L}{T_0 - T_L}\right)$$

The COP of actual absorption refrigeration systems is usually less than 1.

Air-conditioning systems based on absorption refrigeration, called ***absorption chillers***, perform best when the heat source can supply heat at a high temperature with little temperature drop.

SUMMARY

- Refrigerators and Heat Pumps
- The Reversed Carnot Cycle
- The Ideal Vapor-Compression Refrigeration Cycle
- Actual Vapor-Compression Refrigeration Cycle
- Selecting the Right Refrigerant
- Heat Pump Systems
- Innovative Vapor-Compression Refrigeration Systems

Thermodynamics: An Engineering Approach, 5th Edition
Yunus A. Cengel, Michael A. Boles
McGraw-Hill, 2008

Chapter 12

THERMODYNAMIC PROPERTY RELATIONS

Prof. Dr. Ali PINARBAŞI
Yildiz Technical University
Mechanical Engineering Department
Yildiz, ISTANBUL

THERMODYNAMIC PROPERTY RELATIONS

Objectives

- Develop fundamental relations between commonly encountered thermodynamic properties and express the properties that cannot be measured directly in terms of easily measurable properties.
- Review and use partial derivatives in the development of thermodynamic property relations.
- Develop the Maxwell relations, which form the basis for many thermodynamic relations.
- Develop the Clapeyron equation and determine the enthalpy of vaporization from P, v, and T measurements alone.
- Develop general relations for c_v, c_p, du, dh, and ds that are valid for all pure substances under all conditions.
- Discuss the Joule-Thomson coefficient.
- Develop a method of evaluating the Δh, Δu, and Δs of real gases through the use of generalized enthalpy and entropy departure charts..

A LITTLE MATH—PARTIAL DERIVATIVES AND ASSOCIATED RELATIONS

the state postulate, which expresses that the state of a simple, compressible substance is completely specified by any two independent, intensive properties. All other properties at that state can be expressed in terms of those two properties.

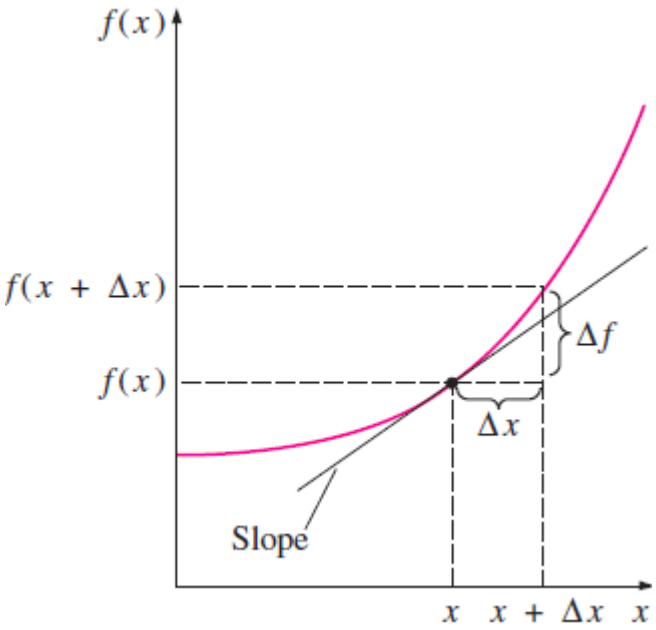

The derivative of a function at a specified point represents the slope of the function at that point.

$$f = f(x) \qquad z = z(x, y)$$

$$\frac{df}{dx} = \lim_{\Delta x \to 0} \frac{\Delta f}{\Delta x} = \lim_{\Delta x \to 0} \frac{f(x + \Delta x) - f(x)}{\Delta x}$$

the derivative of a function f(x) with respect to x represents the rate of change of f with x.

Example 12–1

The c_p of ideal gases depends on temperature only, and it is expressed as $c_p(T)=dh(T)/dT$. Determine the c_p of air at 300 K, using the enthalpy data from Table A–17, and compare it to the value listed in Table A–2b.

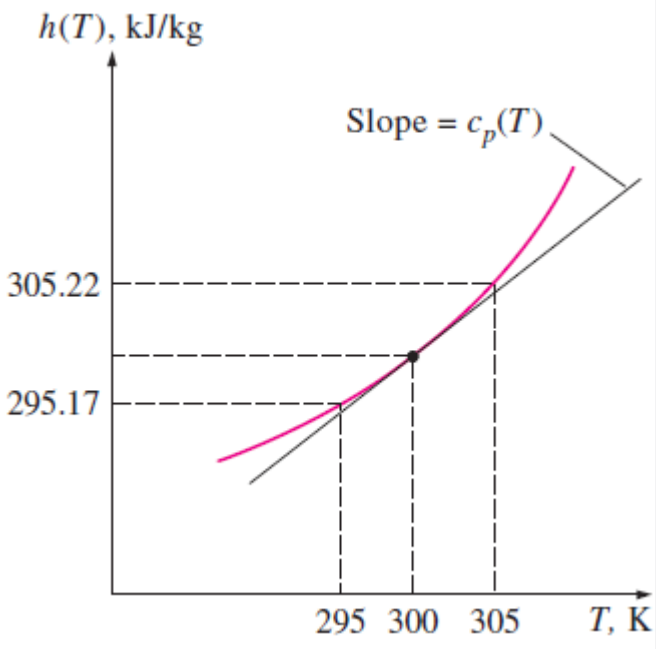

$$c_p(300\text{ K}) = \left[\frac{dh(T)}{dT}\right]_{T\,=\,300\text{ K}} \cong \left[\frac{\Delta h(T)}{\Delta T}\right]_{T\,\cong\,300\text{ K}} = \frac{h(305\text{ K}) - h(295\text{ K})}{(305 - 295)\text{ K}}$$

$$= \frac{(305.22 - 295.17)\text{ kJ/kg}}{(305 - 295)\text{ K}} = \mathbf{1.005\ kJ/kg \cdot K}$$

Partial Differentials

Now consider a function that depends on two (or more) variables, such as $z=z(x, y)$. This time the value of z depends on both x and y. It is sometimes desirable to examine the dependence of z on only one of the variables. This is done by allowing one variable to change while holding the others constant and observing the change in the function. The variation of $z(x, y)$ with x when y is held constant is called the **partial derivative** of z with respect to x, and it is expressed as

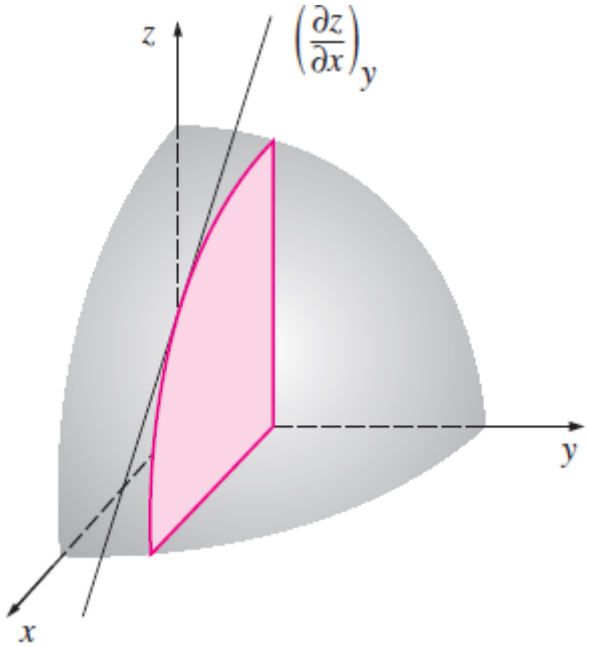

Geometric representation of partial derivative $(\partial z/\partial x)_y$.

$$\left(\frac{\partial z}{\partial x}\right)_y = \lim_{\Delta x \to 0} \left(\frac{\Delta z}{\Delta x}\right)_y = \lim_{\Delta x \to 0} \frac{z(x + \Delta x, y) - z(x, y)}{\Delta x}$$

The symbol ∂ represents differential changes, just like the symbol d. They differ in that the symbol d represents the *total* differential change of a function and reflects the influence of all variables, whereas ∂ represents the *partial* differential change due to the variation of a single variable.

Note that the changes indicated by d and ∂ are identical for independent variables, but not for dependent variables.

$$\Delta z = z(x + \Delta x, y + \Delta y) - z(x, y)$$

$$\Delta z = z(x + \Delta x, y + \Delta y) - z(x, y + \Delta y) + z(x, y + \Delta y) - z(x, y)$$

$$\Delta z = \frac{z(x + \Delta x, y + \Delta y) - z(x, y + \Delta y)}{\Delta x}\Delta x + \frac{z(x, y + \Delta y) - z(x, y)}{\Delta y}\Delta y$$

$$dz = \left(\frac{\partial z}{\partial x}\right)_y dx + \left(\frac{\partial z}{\partial y}\right)_x dy$$

This equation is the fundamental relation for the **total differential** of a dependent variable in terms of its partial derivatives with respect to the independent variables. This relation can easily be extended to include more independent variables.

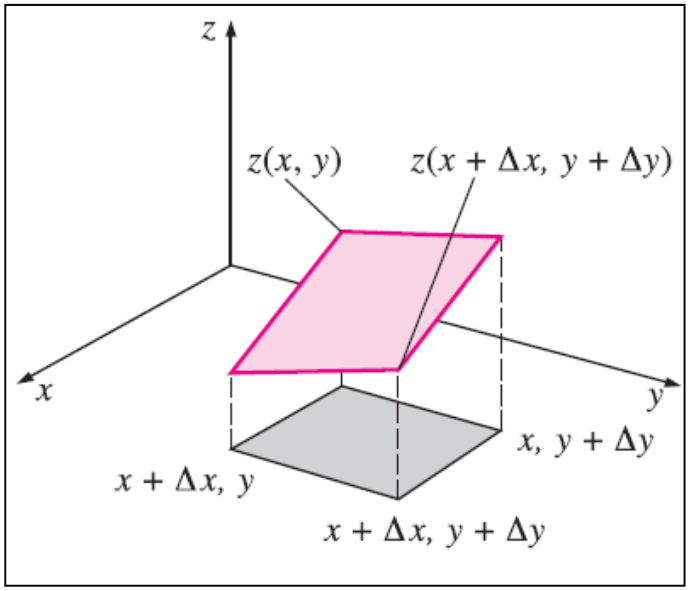

Geometric representation of total derivative *dz* for a function *z*(*x*, *y*).

Example 12–2

Consider air at 300 K and 0.86 m3/kg. The state of air changes to 302 K and 0.87 m3/kg as a result of some disturbance. Using Eq. 12–3, estimate the change in the pressure of air.

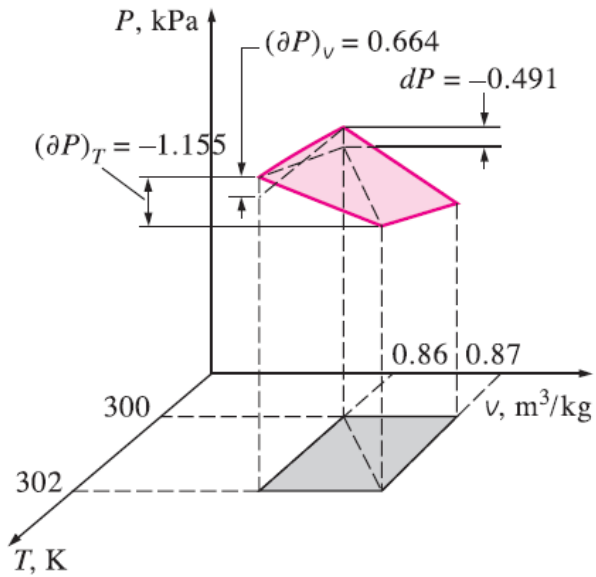

$$dT \cong \Delta T = (302 - 300)\ \text{K} = 2\ \text{K}$$

$$dv \cong \Delta v = (0.87 - 0.86)\ \text{m}^3/\text{kg} = 0.01\ \text{m}^3/\text{kg}$$

$$dP = \left(\frac{\partial P}{\partial T}\right)_v dT + \left(\frac{\partial P}{\partial v}\right)_T dv = \frac{R\,dT}{v} - \frac{RT\,dv}{v^2}$$

$$= (0.287\ \text{kPa}\cdot\text{m}^3/\text{kg}\cdot\text{K})\left[\frac{2\ \text{K}}{0.865\ \text{m}^3/\text{kg}} - \frac{(301\ \text{K})(0.01\ \text{m}^3/\text{kg})}{(0.865\ \text{m}^3/\text{kg})^2}\right]$$

$$= 0.664\ \text{kPa} - 1.155\ \text{kPa}$$

$$= \mathbf{-0.491\ kPa}$$

$$\left(\frac{\partial P}{\partial T}\right)_v dT = (\partial P)_v = 0.664\ \text{kPa}$$

$$\left(\frac{\partial P}{\partial v}\right)_T dv = (\partial P)_T = -1.155\ \text{kPa}$$

$$dP = (\partial P)_v + (\partial P)_T = 0.664 - 1.155 = -0.491\ \text{kPa}$$

Partial Differential Relations

$$dz = M\,dx + N\,dy$$

$$M = \left(\frac{\partial z}{\partial x}\right)_y \quad \text{ve} \quad N = \left(\frac{\partial z}{\partial y}\right)_x$$

$$\left(\frac{\partial M}{\partial y}\right)_x = \frac{\partial^2 z}{\partial x\,\partial y} \quad \text{ve} \quad \left(\frac{\partial N}{\partial x}\right)_y = \frac{\partial^2 z}{\partial y\,\partial x}$$

The order of differentiation is immaterial for properties since they are continuous point functions and have exact differentials. Therefore, the two relations above are identical:

$$\left(\frac{\partial M}{\partial y}\right)_x = \left(\frac{\partial N}{\partial x}\right)_y$$

$$dx = \left(\frac{\partial x}{\partial y}\right)_z dy + \left(\frac{\partial x}{\partial z}\right)_y dz$$

$$dz = \left[\left(\frac{\partial z}{\partial x}\right)_y \left(\frac{\partial x}{\partial y}\right)_z + \left(\frac{\partial z}{\partial y}\right)_x\right] dy + \left(\frac{\partial x}{\partial z}\right)_y \left(\frac{\partial z}{\partial x}\right)_y dz$$

$$\left[\left(\frac{\partial z}{\partial x}\right)_y \left(\frac{\partial x}{\partial y}\right)_z + \left(\frac{\partial z}{\partial y}\right)_x\right] dy = \left[1 - \left(\frac{\partial x}{\partial z}\right)_y \left(\frac{\partial z}{\partial x}\right)_y\right] dz$$

The first relation is called the **reciprocity relation**

$$\left(\frac{\partial x}{\partial z}\right)_y \left(\frac{\partial z}{\partial x}\right)_y = 1 \rightarrow \left(\frac{\partial x}{\partial z}\right)_y = \frac{1}{(\partial z/\partial x)_y}$$

$$\left(\frac{\partial z}{\partial x}\right)_y \left(\frac{\partial x}{\partial y}\right)_z = -\left(\frac{\partial x}{\partial y}\right)_x \rightarrow \left(\frac{\partial x}{\partial y}\right)_z \left(\frac{\partial y}{\partial z}\right)_x \left(\frac{\partial z}{\partial x}\right)_y = -1$$

Function: $z + 2xy - 3y^2z = 0$

1) $z = \dfrac{2xy}{3y^2 - 1} \rightarrow \left(\dfrac{z}{x}\right)_y = \dfrac{2y}{3y^2 - 1}$

2) $x = \dfrac{3y^2z - z}{2y} \rightarrow \left(\dfrac{x}{z}\right)_y = \dfrac{3y^2 - 1}{2y}$

Thus, $\left(\dfrac{z}{x}\right)_y = \dfrac{1}{\left(\dfrac{x}{z}\right)_y}$

Demonstration of the reciprocity relation for the function $z+2xy-3y^2z=0$.

Example 12–3

Using the ideal-gas equation of state, verify (*a*) the cyclic relation and (*b*) the reciprocity relation at constant *P*.

(*a*) Replacing *x*, *y*, and *z* in Eq. 12–9 by *P*, *v*, and *T*, respectively, we can express the cyclic relation for an ideal gas as

$$\left(\frac{\partial P}{\partial v}\right)_T \left(\frac{\partial v}{\partial T}\right)_P \left(\frac{\partial T}{\partial P}\right)_v = -1$$

$$P = P(v, T) = \frac{RT}{v} \rightarrow \left(\frac{\partial P}{\partial v}\right)_T = -\frac{RT}{v^2}$$

$$v = v(P, T) = \frac{RT}{P} \rightarrow \left(\frac{\partial v}{\partial T}\right)_P = \frac{R}{P}$$

$$T = T(P, v) = \frac{Pv}{R} \rightarrow \left(\frac{\partial T}{\partial P}\right)_v = \frac{v}{R}$$

$$\left(-\frac{RT}{v^2}\right)\left(\frac{R}{P}\right)\left(\frac{v}{R}\right) = -\frac{RT}{Pv} = -1$$

(*b*) The reciprocity rule for an ideal gas at *P* constant can be expressed as

$$\left(\frac{\partial v}{\partial T}\right)_P = \frac{1}{(\partial T/\partial v)_P}$$

$$\frac{R}{P} = \frac{1}{P/R} \rightarrow \frac{R}{P} = \frac{R}{P}$$

THE MAXWELL RELATIONS

The equations that relate the partial derivatives of properties *P*, *v*, *T*, and *s* of a simple compressible system to each other are called the *Maxwell relations*.
They are obtained from the four Gibbs equations by exploiting the exactness of the differentials of thermodynamic properties.

$$du = T\,ds - P\,dv$$
$$dh = T\,ds + v\,dP$$

$$a = u - Ts$$
$$g = h - Ts$$

Helmholtz function

Gibbs function

$$da = du - T\,ds - s\,dT$$
$$dg = dh - T\,ds - s\,dT$$

$$da = -s\,dT - P\,dv$$
$$dg = -s\,dT + v\,dP$$

$$dz = M\,dx + N\,dy$$

$$\left(\frac{\partial M}{\partial y}\right)_x = \left(\frac{\partial N}{\partial x}\right)_y$$

$$\left(\frac{\partial T}{\partial v}\right)_s = -\left(\frac{\partial P}{\partial s}\right)_v$$
$$\left(\frac{\partial T}{\partial P}\right)_s = \left(\frac{\partial v}{\partial s}\right)_P$$
$$\left(\frac{\partial s}{\partial v}\right)_T = \left(\frac{\partial P}{\partial T}\right)_v$$
$$\left(\frac{\partial s}{\partial P}\right)_T = -\left(\frac{\partial v}{\partial T}\right)_P$$

They are extremely valuable in thermodynamics because they provide a means of determining the change in entropy, which cannot be measured directly, by simply measuring the changes in properties *P*, *v*, and *T*. Note that the Maxwell relations given above are limited to simple compressible systems.

Example 12–4

Verify the validity of the last Maxwell relation (Eq. 12–19) for steam at 250°C and 300 kPa.

$$\left(\frac{\partial s}{\partial P}\right)_T = -\left(\frac{\partial v}{\partial T}\right)_P$$

$$\left(\frac{\partial s}{\partial P}\right)_T \stackrel{?}{=} -\left(\frac{\partial v}{\partial T}\right)_P$$

$$\left(\frac{\Delta s}{\Delta P}\right)_{T\,=\,250°\mathrm{C}} \stackrel{?}{\cong} -\left(\frac{\Delta v}{\Delta T}\right)_{P\,=\,300\ \mathrm{kPa}}$$

$$\left[\frac{s_{400\ \mathrm{kPa}} - s_{200\ \mathrm{kPa}}}{(400 - 200)\ \mathrm{kPa}}\right]_{T\,=\,250°\mathrm{C}} \stackrel{?}{\cong} -\left[\frac{v_{300°\mathrm{C}} - v_{200°\mathrm{C}}}{(300 - 200)°\mathrm{C}}\right]_{P\,=\,300\ \mathrm{kPa}}$$

$$\frac{(7.3804 - 7.7100)\ \mathrm{kJ/kg \cdot K}}{(400 - 200)\ \mathrm{kPa}} \stackrel{?}{\cong} -\frac{(0.87535 - 0.71643)\ \mathrm{m^3/kg}}{(300 - 200)°\mathrm{C}}$$

$$-0.00165\ \mathrm{m^3/kg \cdot K} \cong -0.00159\ \mathrm{m^3/kg \cdot K}$$

Discussion This example shows that the entropy change of a simple compressible system during an isothermal process can be determined from a knowledge of the easily measurable properties *P*, *v*, and *T* alone.

THE CLAPEYRON EQUATION

The Maxwell relations have far-reaching implications in thermodynamics and are frequently used to derive useful thermodynamic relations. The Clapeyron equation is one such relation, and it enables us to determine the enthalpy change associated with a phase change (such as the enthalpy of vaporization h_{fg}) from a knowledge of P, v, and T data alone.

$$\left(\frac{\partial P}{\partial T}\right)_v = \left(\frac{\partial s}{\partial v}\right)_T$$

During a phase-change process, the pressure is the saturation pressure, which depends on the temperature only and is independent of the specific

$$s_g - s_f = \left(\frac{dp}{dT}\right)_{\text{sat}} (v_g - v_f) \qquad \left(\frac{dp}{dT}\right)_{\text{sat}} = \frac{s_{fg}}{v_{fg}}$$

$$dh = T\,ds + v\,dP^{\nearrow 0} \rightarrow \int_f^g dh = \int_f^g T\,ds \rightarrow h_{fg} = Ts_{fg}$$

Clapeyron equation

$$\left(\frac{dP}{dT}\right)_{\text{sat}} = \frac{h_{fg}}{Tv_{fg}}$$

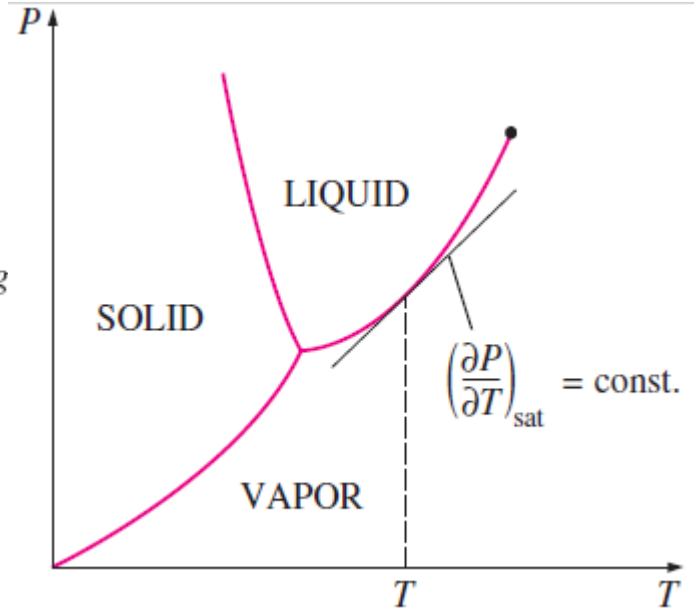

Example 12–5

Using the Clapeyron equation, estimate the value of the enthalpy of vaporization of refrigerant-134a at 20°C, and compare it with the tabulated value.

$$h_{fg} = Tv_{fg}\left(\frac{dP}{dT}\right)_{\text{sat}}$$

where, from Table A–11,

$$v_{fg} = (v_g - v_f)_{@\ 20°\text{C}} = 0.035969 - 0.0008161 = 0.035153\ \text{m}^3/\text{kg}$$

$$\left(\frac{dP}{dT}\right)_{\text{sat, 20°C}} \cong \left(\frac{\Delta P}{\Delta T}\right)_{\text{sat, 20°C}} = \frac{P_{\text{sat @ 24°C}} - P_{\text{sat @ 16°C}}}{24°\text{C} - 16°\text{C}}$$

$$= \frac{646.18 - 504.58\ \text{kPa}}{8°\text{C}} = 17.70\ \text{kPa/K}$$

since $\Delta T(°\text{C}) \equiv \Delta T(\text{K})$. Substituting, we get

$$h_{fg} = (293.15\ \text{K})(0.035153\ \text{m}^3/\text{kg})(17.70\ \text{kPa/K})\left(\frac{1\ \text{kJ}}{1\ \text{kPa}\cdot\text{m}^3}\right)$$

$$= \mathbf{182.40\ kJ/kg}$$

The tabulated value of h_{fg} at 20°C is 182.27 kJ/kg. The small difference between the two values is due to the approximation used in determining the slope of the saturation curve at 20°C.

The Clapeyron equation can be simplified for liquid–vapor and solid–vapor phase changes by utilizing some approximations. At low pressures $v_g >> v_f$, and thus $v_{fg} \cong v_g$. By treating the vapor as an ideal gas, we have $v_g = RT/P$.

Substituting these approximations into Eq. 12–22, we find

$$\left(\frac{dP}{dT}\right)_{\text{sat}} = \frac{Ph_{fg}}{RT^2} \qquad \left(\frac{dP}{P}\right)_{\text{sat}} = \frac{h_{fg}}{R}\left(\frac{dT}{T^2}\right)_{\text{sat}}$$

$$\ln\left(\frac{P_2}{P_1}\right)_{\text{sat}} \cong \frac{h_{fg}}{R}\left(\frac{1}{T_1} - \frac{1}{T_2}\right)_{\text{sat}}$$

Clapeyron–Clausius equation

Example 12–6

Estimate the saturation pressure of refrigerant-134a at -45°C, using the data available in the refrigerant tables.

$$\ln\left(\frac{P_2}{P_1}\right)_{\text{sat}} \cong \frac{h_{fg}}{R}\left(\frac{1}{T_1} - \frac{1}{T_2}\right)_{\text{sat}}$$

$$\ln\left(\frac{P_2}{51.25\ \text{kPa}}\right) \cong \frac{225.86\ \text{kJ/kg}}{0.08149\ \text{kJ/kg}\cdot\text{K}}\left(\frac{1}{233\ \text{K}} - \frac{1}{228\ \text{K}}\right)$$

$$P_2 \cong \mathbf{39.48\ kPa}$$

GENERAL RELATIONS for du, dh, ds, c_v, and c_p

The state postulate established that the state of a simple compressible system is completely specified by two independent, intensive properties.

Therefore, at least theoretically, we should be able to calculate all the properties of a system at any state once two independent, intensive properties are available.

This is certainly good news for properties that cannot be measured directly such as internal energy, enthalpy, and entropy.

However, the calculation of these properties from measurable ones depends on the availability of simple and accurate relations between the two groups.

Internal Energy Changes

$$du = \left(\frac{\partial u}{\partial T}\right)_v dT + \left(\frac{\partial u}{\partial v}\right)_T dv$$

$$du = c_v\, dT + \left(\frac{\partial u}{\partial v}\right)_T dv$$

$$ds = \left(\frac{\partial s}{\partial T}\right)_v dT + \left(\frac{\partial s}{\partial v}\right)_T dv$$

$$du = T\left(\frac{\partial s}{\partial T}\right)_v dT + \left[T\left(\frac{\partial s}{\partial v}\right)_T - P\right] dv$$

$$\left(\frac{\partial s}{\partial T}\right)_v = \frac{c_v}{T}$$

$$\left(\frac{\partial u}{\partial v}\right)_T = T\left(\frac{\partial s}{\partial v}\right)_T - P$$

$$\left(\frac{\partial u}{\partial v}\right)_T = T\left(\frac{\partial P}{\partial T}\right)_v - P$$

$$du = c_v\, dT + \left[T\left(\frac{\partial P}{\partial T}\right)_v - P\right] dv$$

$$u_2 - u_1 = \int_{T_1}^{T_2} c_v\, dT + \int_{v_1}^{v_2} \left[T\left(\frac{\partial P}{\partial T}\right)_v - P\right] \cdot dv$$

Enthalpy Changes

$$dh = \left(\frac{\partial h}{\partial T}\right)_P dT + \left(\frac{\partial h}{\partial P}\right)_T dP \qquad dh = c_p\, dT + \left(\frac{\partial h}{\partial P}\right)_T dP$$

$$ds = \left(\frac{\partial s}{\partial T}\right)_P dT + \left(\frac{\partial s}{\partial P}\right)_T dP \qquad dh = T\left(\frac{\partial s}{\partial T}\right)_P dT + \left[v + T\left(\frac{\partial s}{\partial P}\right)_T\right] dP$$

$$\left(\frac{\partial s}{\partial T}\right)_P = \frac{c_p}{T} \qquad \left(\frac{\partial h}{\partial P}\right)_T = v - T\left(\frac{\partial v}{\partial T}\right)_P$$

$$\left(\frac{\partial h}{\partial P}\right)_T = v + T\left(\frac{\partial s}{\partial P}\right)_T \qquad dh = c_p\, dT + \left[v - T\left(\frac{\partial v}{\partial T}\right)_P\right] dP$$

$$\boxed{h_2 - h_1 = \int_{T_1}^{T_2} c_p\, dT + \int_{P_1}^{P_2} \left[v - T\left(\frac{\partial v}{\partial T}\right)_P\right] dP}$$

$$h_2 - h_1 = u_2 - u_1 + (P_2 v_2 - P_1 v_1)$$

Entropy Changes

$$ds = \frac{c_v}{T}\,dT + \left(\frac{\partial P}{\partial T}\right)_v dv$$

$$s_2 - s_1 = \int_{T_1}^{T_2} \frac{c_v}{T}\,dT + \int_{v_1}^{v_2} \left(\frac{\partial P}{\partial T}\right)_v dv$$

$$ds = \frac{c_P}{T}\,dT - \left(\frac{\partial v}{\partial T}\right)_P dP$$

$$s_2 - s_1 = \int_{T_1}^{T_2} \frac{c_p}{T}\,dT - \int_{P_1}^{P_2} \left(\frac{\partial v}{\partial T}\right)_P dP$$

Specific Heats c_v and c_p

$$\left(\frac{\partial c_v}{\partial v}\right)_T = T\left(\frac{\partial^2 P}{\partial T^2}\right)_v$$

$$\left(\frac{\partial c_p}{\partial P}\right)_T = -T\left(\frac{\partial^2 v}{\partial T^2}\right)_P$$

$$(c_p - c_{p0})_T = -T\int_0^P \left(\frac{\partial^2 v}{\partial T^2}\right)_P dP$$

$$dT = \frac{T(\partial P/\partial T)_v}{c_p - c_v}dv + \frac{T(\partial v/\partial T)_P}{c_p - c_v}dP$$

$$dT = \left(\frac{\partial T}{\partial v}\right)_P dv + \left(\frac{\partial T}{\partial P}\right)_v dP$$

$$c_p - c_v = T\left(\frac{\partial v}{\partial T}\right)_P\left(\frac{\partial P}{\partial T}\right)_v$$

$$\left(\frac{\partial P}{\partial T}\right)_v\left(\frac{\partial T}{\partial v}\right)_P\left(\frac{\partial v}{\partial P}\right)_T = -1 \rightarrow \left(\frac{\partial P}{\partial T}\right)_v = -\left(\frac{\partial v}{\partial T}\right)_P\left(\frac{\partial P}{\partial v}\right)_T$$

volume expansivity β

$$\beta = \frac{1}{v}\left(\frac{\partial v}{\partial T}\right)_P$$

isothermal compressibility α,

$$\alpha = -\frac{1}{v}\left(\frac{\partial v}{\partial P}\right)_T$$

$$c_p - c_v = -T\left(\frac{\partial v}{\partial T}\right)_P^2\left(\frac{\partial P}{\partial v}\right)_T$$

Mayer relation

$$c_p - c_v = \frac{vT\beta^2}{\alpha}$$

We can draw several conclusions from Mayer

1. ***the constant-pressure specific heat is always greater than or equal to the constant-volume specific heat***: $c_p \geq cv$

2. The difference between c_p and c_v approaches zero as the absolute temperature approaches zero.

3. The two specific heats are identical for truly incompressible substances since v= constant. The difference between the two specific heats is very small and is usually disregarded for substances that are ***nearly*** incompressible, such as liquids and solids.

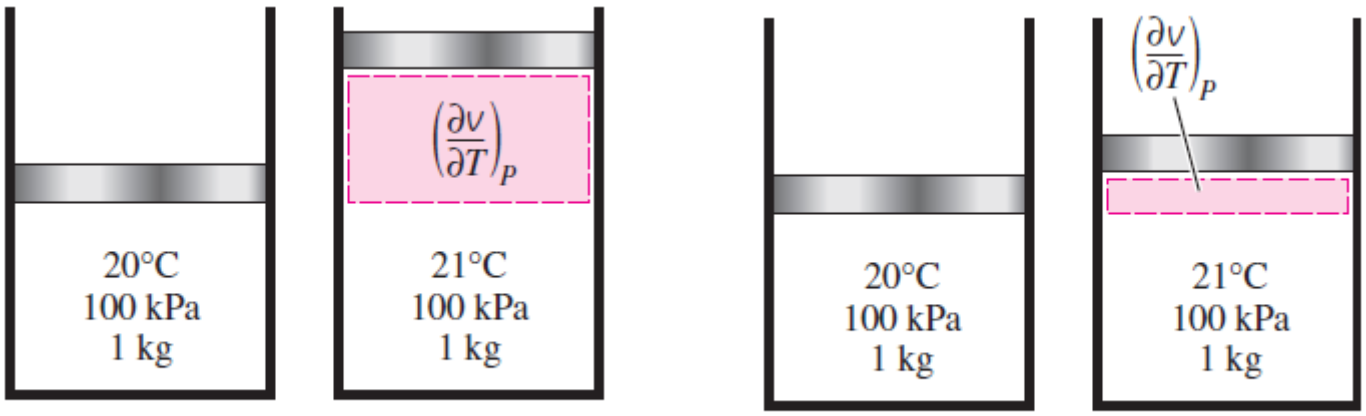

(*a*) A substance with a large β (*b*) A substance with a small β

The volume expansivity (also called the *coefficient of volumetric expansion*) is a measure of the change in volume with temperature at constant pressure.

Example 12–7

Derive a relation for the internal energy change as a gas that obeys the van der Waals equation of state. Assume that in the range of interest c_v varies according to the relation $c_v = c_1 + c_2 T$, where c_1 and c_2 are constants.

$$u_2 - u_1 = \int_{T_1}^{T_2} c_v \, dT + \int_{v_1}^{v_2} \left[T\left(\frac{\partial P}{\partial T}\right)_v - P \right] dv$$

$$P = \frac{RT}{v - b} - \frac{a}{v^2} \qquad \left(\frac{\partial P}{\partial T}\right)_v = \frac{R}{v - b}$$

$$T\left(\frac{\partial P}{\partial T}\right)_v - P = \frac{RT}{v - b} - \frac{RT}{v - b} + \frac{a}{v^2} = \frac{a}{v^2}$$

$$u_2 - u_1 = \int_{T_1}^{T_2} (c_1 + c_2 T) \, dT + \int_{v_1}^{v_2} \frac{a}{v^2} \, dv$$

$$u_2 - u_1 = c_1(T_2 - T_1) + \frac{c_2}{2}(T_2^2 - T_1^2) + a\left(\frac{1}{v_1} - \frac{1}{v_2}\right)$$

Example 12–8

Show that the internal energy of (*a*) an ideal gas and (*b*) an incompressible substance is a function of temperature only, $u = u(T)$.

$$du = c_v\,dT + \left[T\left(\frac{\partial P}{\partial T}\right)_v - P\right]dv$$

(*a*) For an ideal gas $Pv = RT$. Then

$$T\left(\frac{\partial P}{\partial T}\right)_v - P = T\left(\frac{R}{v}\right) - P = P - P = 0$$

$$du = c_v\,dT$$

$$\left(\frac{\partial c_v}{\partial v}\right)_T = T\left(\frac{\partial^2 P}{\partial T^2}\right)_v$$

$$\left(\frac{\partial P}{\partial T}\right)_v = \frac{R}{v} \quad \text{ve} \quad \left(\frac{\partial^2 P}{\partial T^2}\right)_v = \left[\frac{\partial (R/v)}{\partial T}\right]_v = 0$$

$$\left(\frac{\partial c_v}{\partial v}\right)_T = 0$$

(*b*) For an incompressible substance, v = constant and thus dv=0. Also $c_p = c_v = c$ since $\propto = \beta = 0$ for incompressible substances.

$$du = c\,dT$$

$$\left(\frac{\partial c_p}{\partial P}\right)_T = -T\left(\frac{\partial^2 v}{\partial T^2}\right)_P = 0$$

Therefore we conclude that the internal energy of a truly incompressible substance depends on temperature only.

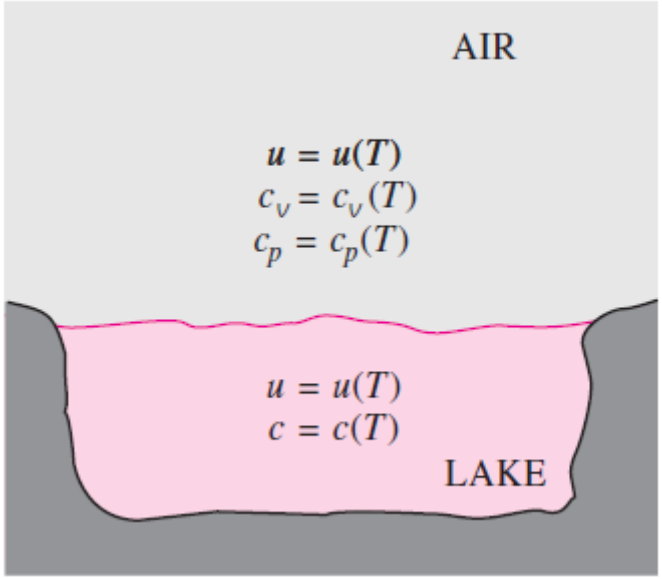

The internal energies and specific heats of ideal gases and incompressible substances depend on temperature only.

Example 12–9

Show that *cp* - *cv* = *R* for an ideal gas.

$$c_p - c_v = -T\left(\frac{\partial v}{\partial T}\right)_P^2\left(\frac{\partial P}{\partial v}\right)_T$$

$$P = \frac{RT}{v} \rightarrow \left(\frac{\partial P}{\partial v}\right)_T = -\frac{RT}{v^2} = -\frac{P}{v}$$

$$v = \frac{RT}{P} \rightarrow \left(\frac{\partial v}{\partial T}\right)_P^2 = \left(\frac{R}{P}\right)^2$$

$$-T\left(\frac{\partial v}{\partial T}\right)_P^2\left(\frac{\partial P}{\partial v}\right)_T = -T\left(\frac{R}{P}\right)^2\left(-\frac{P}{v}\right) = R$$

$$c_p - c_v = R$$

THE JOULE-THOMSON COEFFICIENT

When a fluid passes through a restriction such as a porous plug, a capillary tube, or an ordinary valve, its pressure decreases.

$$\mu = \left(\frac{\partial T}{\partial P}\right)_h \qquad \mu_{JT}\begin{cases} < 0 & \text{temperature increases} \\ = & \text{temperature remains constant} \\ > 0 & \text{temperature decreases} \end{cases}$$

Thus the Joule-Thomson coefficient is a measure of the change in temperature with pressure during a constant-enthalpy process.

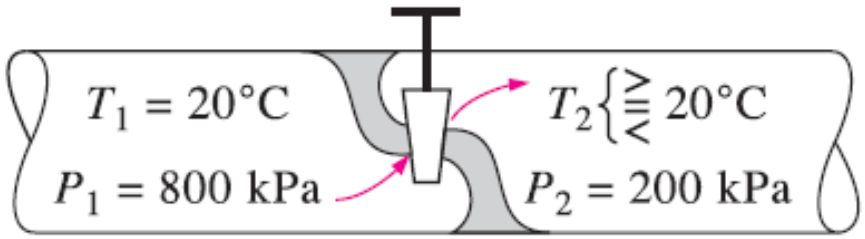

The temperature of a fluid may increase, decrease, or remain constant during a throttling process.

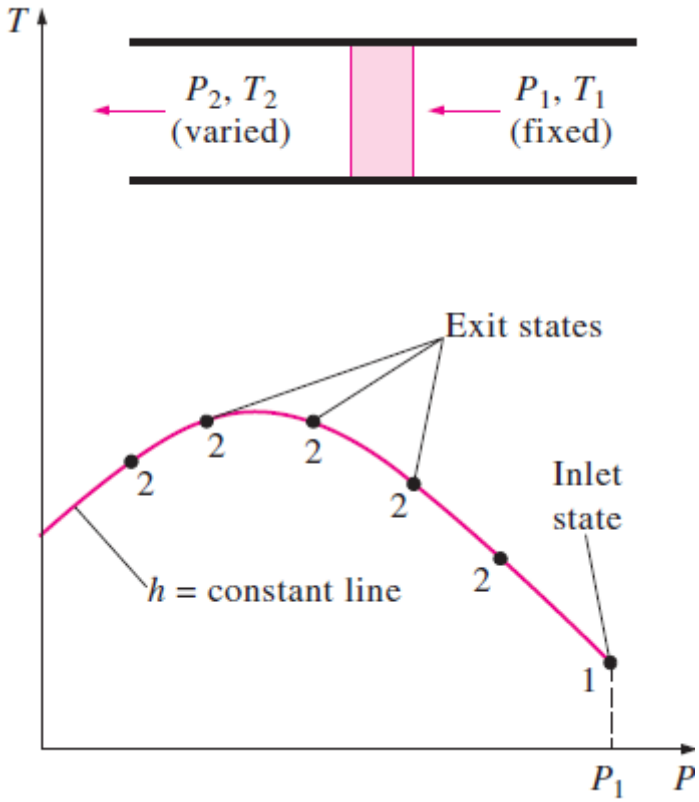

The development of an *h* constant line on a *P-T* diagram.

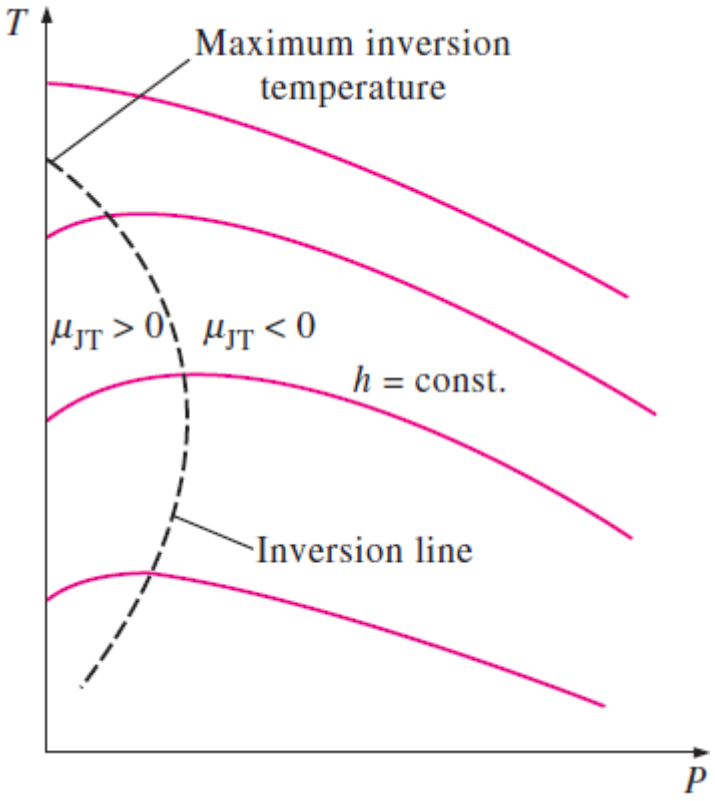

Constant-enthalpy lines of a substance on a *T-P* diagram.

A throttling process proceeds along a constant-enthalpy line in the direction of decreasing pressure, that is, from right to left.

Therefore, the temperature of a fluid will increase during a throttling process that takes place on the right-hand side of the inversion line.

However, the fluid temperature will decrease during a throttling process that takes place on the left-hand side of the inversion line.

It is clear from this diagram that a cooling effect cannot be achieved by throttling unless the fluid is below its maximum inversion temperature.

Example 12-10

Show that the Joule-Thomson coefficient of an ideal gas is zero..

$$\left(\frac{\partial v}{\partial T}\right)_P = \frac{R}{P}$$

$$\mu_{JT} = \frac{-1}{c_p}\left[v - T\left(\frac{\partial v}{\partial T}\right)_P\right] = \frac{-1}{c_p}\left[v - T\frac{R}{P}\right] = -\frac{1}{c_p}(v - v) = 0$$

Discussion This result is not surprising since the enthalpy of an ideal gas is a function of temperature only, $h = h(T)$, which requires that the temperature remain constant when the enthalpy remains constant. Therefore, a throttling process cannot be used to lower the temperature of an ideal gas.

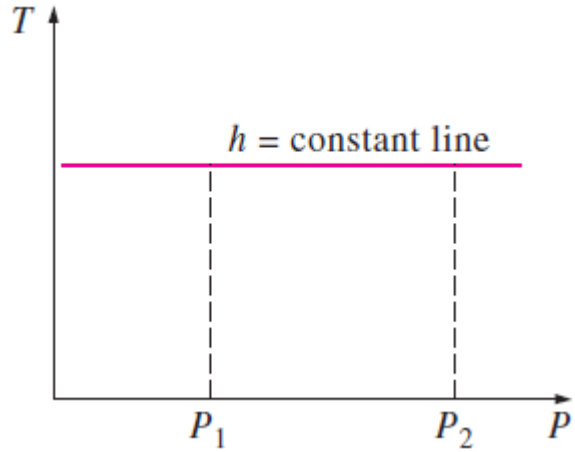

The temperature of an ideal gas remains constant during a throttling process since h constant and T constant lines on a T-P diagram coincide.

THE Δh, Δu, AND Δs OF REAL GASES

We have mentioned several times that gases at low pressures behave as ideal gases and obey the relation $Pv = RT$. The properties of ideal gases are relatively easy to evaluate since the properties u, h, c_v, and c_p depend on temperature only.

At high pressures, however, gases deviate considerably from ideal-gas behavior, and it becomes necessary to account for this deviation.

we accounted for the deviation in properties P, v, and T by either using more complex equations of state or evaluating the compressibility factor Z from the compressibility charts.

Now we extend the analysis to evaluate the changes in the enthalpy, internal energy, and entropy of nonideal (real) gases, using the general relations for du, dh, and ds developed earlier.

Enthalpy Changes of Real Gases

The enthalpy of a real gas, in general, depends on the pressure as well as on the temperature. Thus the enthalpy change of a real gas during a process can be evaluated from the general relation for *dh*

$$h_2 - h_1 = \int_{T_1}^{T_2} c_p \, dT + \int_{P_1}^{P_2} \left[v - T\left(\frac{\partial v}{\partial T}\right)_P \right] dP$$

For an isothermal process $dT = 0$, and the first term vanishes. For a constant-pressure process, $dP = 0$, and the second term vanishes.

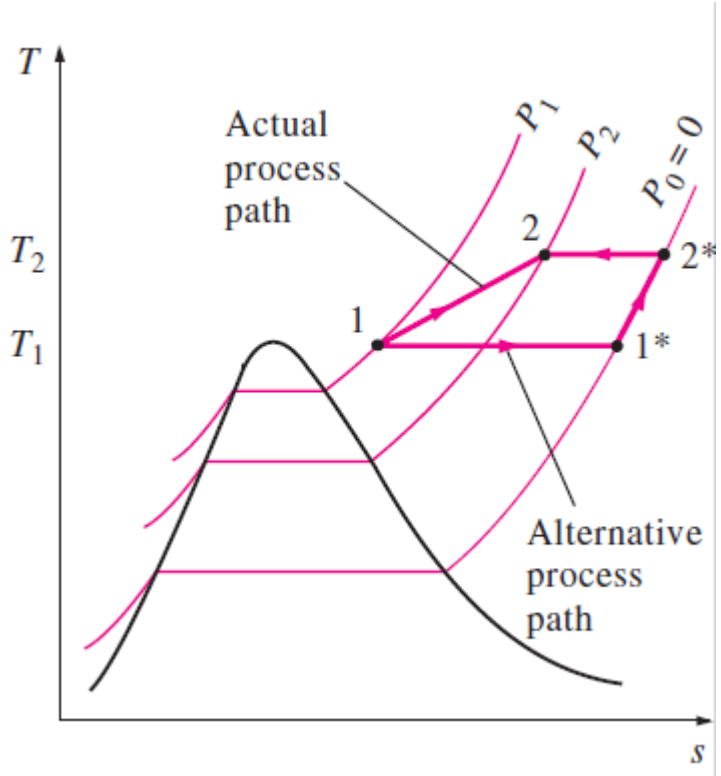

An alternative process path to evaluate the enthalpy changes of real gases.

Using a superscript asterisk (*) to denote an ideal-gas state, we can express the enthalpy change of a real gas during process 1-2 as

$$h_2 - h_1 = (h_2 - h_2^*) + (h_2^* - h_1^*) + (h_1^* - h_1)$$

$$h_2 - h_2^* = 0 + \int_{P_2^*}^{P_2} \left[v - T\left(\frac{\partial v}{\partial T}\right)_P \right]_{T=T_2} dP = \int_{P_0}^{P_2} \left[v - T\left(\frac{\partial v}{\partial T}\right)_P \right]_{T=T_2} dP$$

$$h_2^* - h_1^* = \int_{T_1}^{T_2} c_p \, dT + 0 = \int_{T_1}^{T_2} c_{p0}(T) \, dT$$

$$h_1^* - h_1 = 0 + \int_{P_1}^{P_1^*} \left[v - T\left(\frac{\partial v}{\partial T}\right)_P \right]_{T=T_1} dP = -\int_{P_0}^{P_1} \left[v - T\left(\frac{\partial v}{\partial T}\right)_P \right]_{T=T_1} dP$$

The difference between *h* and *h** is called the **enthalpy departure**, and it represents the variation of the enthalpy of a gas with pressure at a fixed temperature. The calculation of enthalpy departure requires a knowledge of the *P-v-T* behavior of the gas. In the absence of such data, we can use the relation *Pv ZRT*, where *Z* is the compressibility factor.

$$(h^* - h)_T = -RT^2 \int_0^P \left(\frac{\partial Z}{\partial T}\right)_P \frac{dP}{P}$$

$$T = T_{cr}T_R \text{ and } P = P_{cr}P_R$$

$$Z_h = \frac{(\bar{h}^* - \bar{h})_T}{R_u T_{kr}} = T_R^2 \int_0^{P_R} \left(\frac{\partial Z}{\partial T_R}\right)_{P_R} d(\ln P_R)$$

enthalpy departure factor

The values of Z_h are presented in graphical form as a function of P_R and T_R in here. This graph is called the **generalized enthalpy departure chart,** and it is used to determine the deviation of the enthalpy of a gas at a given *P* and *T* from the enthalpy of an ideal gas at the same *T.*

the enthalpy change of a gas during a process 1-2

$$\bar{h}_2 - \bar{h}_1 = (\bar{h}_2 - \bar{h}_1)_{ideal} - R_u T_{cr}(Z_{h_2} - Z_{h_1})$$

$$(\bar{h}_2 - \bar{h}_1)_{ideal}$$

$$h_2 - h_1 = (h_2 - h_1)_{ideal} - RT_{cr}(Z_{h_2} - Z_{h_1})$$

Internal Energy Changes of Real Gases

$$\bar{h} = \bar{u} + P\bar{v} = \bar{u} + ZR_uT$$

$$\bar{u}_2 - \bar{u}_1 = (\bar{h}_2 - \bar{h}_1) - R_u(Z_2T_2 - Z_1T_1)$$

Entropy Changes of Real Gases

The general relation for *ds* was expressed as

$$s_2 - s_1 = \int_{T_1}^{T_2} \frac{c_p}{T}\, dT - \int_{P_1}^{P_2} \left(\frac{\partial v}{\partial T}\right)_P dP$$

$$s_2 - s_1 = (s_2 - s_b^*) + (s_b^* - s_2^*) + (s_2^* - s_1^*) + (s_1^* - s_a^*) + (s_a^* - s_1)$$

The entropy change during this isothermal process can be expressed as

$$(s_P - s_P^*)_T = (s_P - s_0^*)_T + (s_0^* - s_P^*)_T$$

$$= -\int_0^P \left(\frac{\partial v}{\partial T}\right)_P dP - \int_P^0 \left(\frac{\partial v^*}{\partial T}\right)_P dP$$

$$(s_P - s_P^*)_T = \int_0^P \left[\frac{(1 - Z)R}{P} - \frac{RT}{P}\left(\frac{\partial Zr}{\partial T}\right)_P\right] dP$$

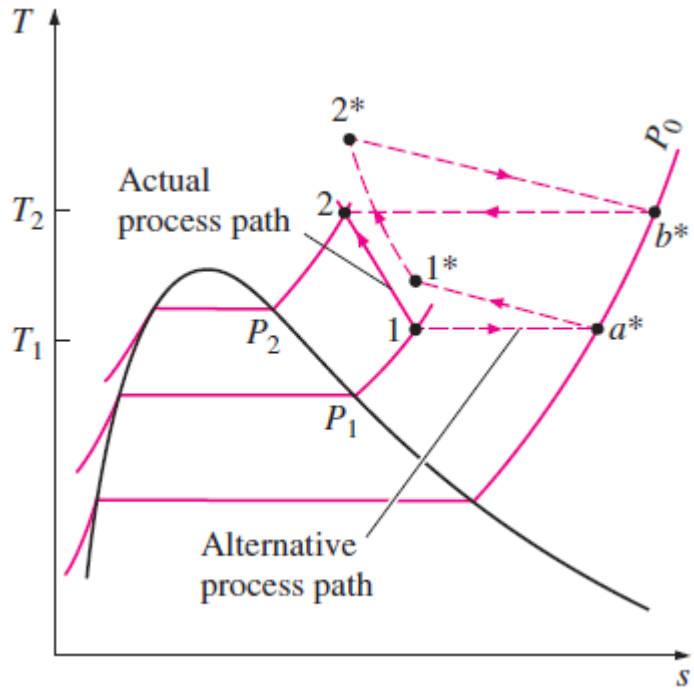

An alternative process path to evaluate the entropy changes of real gases during process 1-2.

$$T = T_{cr}T_R \text{ and } P = P_{cr}P_R$$

entropy departure factor

$$Z_s = \frac{(\bar{s}^* - \bar{s})_{T,P}}{R_u} = \int_0^{P_R} \left[Z - 1 + T_R \left(\frac{\partial Z}{\partial T_R} \right)_{P_R} \right] d(\ln P_R)$$

entropy departure

$$(\bar{s}^* - \bar{s})_{T,P}$$

The values of Z_s are presented in graphical form as a function of P_R and T_R in Fig. A–30. This graph is called the **generalized entropy departure chart,** and it is used to determine the deviation of the entropy of a gas at a given *P* and *T* from the entropy of an ideal gas at the same *P* and *T*.

for the entropy change of a gas during a process 1-2 as

$$\bar{s}_2 - \bar{s}_1 = (\bar{s}_2 - \bar{s}_1)_{\text{ideal}} - R_u(Z_{s_2} - Z_{s_1})$$

$$s_2 - s_1 = (s_2 - s_1)_{\text{ideal}} - R(Z_{s_2} - Z_{s_1})$$

Example 12–11

Determine the enthalpy change and the entropy change of O_2 per unit mole as it undergoes a change of state from 220 K and 5 MPa to 300 K and 10 MPa (*a*) by assuming ideal-gas behavior and (*b*) by accounting for the deviation from ideal-gas behavior.

(*a*) If the O_2 is assumed to behave as an ideal gas, its enthalpy will depend on temperature only, and the enthalpy values at the initial and the final temperatures can be determined from the ideal-gas table of O_2 (A–19) at the specified temperatures:

$$(\bar{h}_2 - \bar{h}_1)_{\text{ideal}} = \bar{h}_{2,\,\text{ideal}} - \bar{h}_{1,\,\text{ideal}}$$
$$= (8736 - 6404)\ \text{kJ/kmol}$$
$$= \mathbf{2332\ kJ/kmol}$$

$$(\bar{s}_2 - \bar{s}_1)_{\text{ideal}} = \bar{s}_2^{\circ} - \bar{s}_1^{\circ} - R_u \ln \frac{P_2}{P_1}$$
$$= (205.213 - 196.171)\ \text{kJ/kmol} \cdot \text{K}$$
$$- (8.314\ \text{kJ/kmol} \cdot \text{K}) \times \ln \frac{10\ \text{MPa}}{5\ \text{MPa}}$$
$$= \mathbf{3.28\ kJ/kmol \cdot K}$$

(*b*) The deviation from the ideal-gas behavior can be accounted for by determining the enthalpy and entropy departures from the generalized charts at each state:

$$\left.\begin{aligned} T_{R_1} &= \frac{T_1}{T_{cr}} = \frac{220}{154.8} = 1.42 \\ P_{R_1} &= \frac{P_1}{P_{cr}} = \frac{5}{5.08} = 0.98 \end{aligned}\right\} Z_{h_1} = 0.53,\ Z_{s_1} = 0.25$$

$$\left.\begin{aligned} T_{R_2} &= \frac{T_2}{T_{cr}} = \frac{300}{154.8} = 1.94 \\ P_{R_2} &= \frac{P_2}{P_{cr}} = \frac{10}{5.08} = 1.97 \end{aligned}\right\} Z_{h_2} = 0.48,\ Z_{s_2} = 0.20$$

$$\begin{aligned} \bar{h}_2 - \bar{h}_1 &= (\bar{h}_2 - \bar{h}_1)_{\text{ideal}} - R_u T_{cr}(Z_{h_2} - Z_{h_2}) \\ &= 2332\ \text{kJ/kmol} - (8.314\ \text{kJ/kmol} \cdot \text{K})[154.8\ \text{K}(0.48 - 0.53)] \\ &= \mathbf{2396\ kJ/kmol} \end{aligned}$$

$$\bar{s}_2 - \bar{s}_1 = (\bar{s}_2 - \bar{s}_1)_{\text{ideal}} - R_u(Z_{s_2} - Z_{s_1})$$
$$= 3.28 \text{ kJ/kmol} \cdot \text{K} - (8.314 \text{ kJ/kmol} \cdot \text{K})(0.20 - 0.25)$$
$$= \mathbf{3.70 \text{ kJ/kmol} \cdot \text{K}}$$

Therefore, in this case, the ideal-gas assumption would underestimate the enthalpy change of the oxygen by 2.7 percent and the entropy change by 11.4 percent.

Summary

- A Little Math—Partial Derivatives and Associated Relations
  - Partial Differentials
  - Partial Differential Relations
- The Maxwell Relations
- The Clapeyron Equation
- General Relations for du, dh, ds, c_v, and c_p
  - Internal Energy Changes
  - Enthalpy Changes
  - Entropy Changes
  - Specific Heats c_v and c_p
- The Joule-Thomson Coefficient
- The Δh, Δu and Δs of Real Gases
  - Enthalpy Changes of Real Gases
  - Internal Energy Changes of Real Gases
  - Entropy Changes of Real Gases

Thermodynamics: An Engineering Approach, 5th Edition
Yunus A. Cengel, Michael A. Boles
McGraw-Hill, 2008

Chapter 13
GAS MIXTURES

Prof. Dr. Ali PINARBAŞI
Yildiz Technical University
Mechanical Engineering Department
Yildiz, ISTANBUL

Objectives

- Develop rules for determining nonreacting gas mixture properties from knowledge of mixture composition and the properties of the individual components.
- Define the quantities used to describe the composition of a mixture, such as mass fraction, mole fraction, and volume fraction.
- Apply the rules for determining mixture properties to idealgas mixtures and real-gas mixtures.
- Predict the P-v-T behavior of gas mixtures based on Dalton's law of additive pressures and Amagat's law of additive volumes.
- Develop the concept of chemical potential and determine the separation work of mixtures...

COMPOSITION OF A GAS MIXTURE: MASS AND MOLE FRACTIONS

To determine the properties of a mixture, we need to know the *composition* of the mixture as well as the properties of the individual components. There are two ways to describe the composition of a mixture: either by specifying the number of moles of each component, called **molar analysis,** or by specifying the mass of each component, called **gravimetric analysis.**

H_2	+	O_2	→	$H_2 + O_2$
6 kg		32 kg		38 kg

The mass of a mixture is equal to the sum of the masses of its components.

H_2	+	O_2	→	$H_2 + O_2$
3 kmol		1 kmol		4 kmol

The number of moles of a nonreacting mixture is equal to the sum of the number of moles of its components.

$$m_m = \sum_{i=1}^{k} m_i \quad \text{ve} \quad N_m = \sum_{i=1}^{k} N_i$$

the ratio of the mole number of a component to the mole number of the mixture is called the **mole fraction** *y*

$$y_i = \frac{N_i}{N_m}$$

The ratio of the mass of a component to the mass of the mixture is called the **mass fraction** m_f

$$\mathrm{mf}_i = \frac{m_i}{m_m}$$

the apparent (or average) molar mass

$$M_m = \frac{m_m}{N_m} = \frac{\sum m_i}{N_m} = \frac{\sum N_i M_i}{N_m} = \sum_{i=1}^{k} y_i M_i$$

the sum of the mass fractions or mole fractions for a mixture is equal to 1

$$\sum_{i=1}^{k} \mathrm{mf}_i = 1 \quad \text{and} \quad \sum_{i=1}^{k} y_i = 1$$

$$m = NM$$

gas constant

$$R_m = \frac{R_u}{M_m}$$

The molar mass of a mixture can also be expressed as

$$M_m = \frac{m_m}{N_m} = \frac{m_m}{\sum m_i / M_i} = \frac{1}{\sum m_i / (m_m M_i)} = \frac{1}{\sum_{i=1}^{k} \frac{\mathrm{mf}_i}{M_i}}$$

Mass and mole fractions of a mixture

$$\mathrm{mf}_i = \frac{m_i}{m_m} = \frac{N_i M_i}{N_m M_m} = y_i \frac{M_i}{M_m}$$

$$H_2 + O_2$$

$$y_{H_2} = 0.75$$
$$y_{O_2} = 0.25$$
$$1.00$$

The sum of the mole fractions of a mixture is equal to 1.

Example 13-1

Consider a gas mixture that consists of 3 kg of O2, 5 kg of N2, and 12 kg of CH4. Determine;

(a) the mass fraction of each component,

(b) the mole fraction of each component, and

(c) the average molar mass and gas constant of the mixture.

3 kg O_2
5 kg N_2
12 kg CH_4

(a) the mass fraction of each component,

$$m_m = m_{O_2} + m_{N_2} + m_{CH_4} = 3 + 5 + 12 = 20 \text{ kg}$$

$$mf_{O_2} = \frac{m_{O_2}}{m_m} = \frac{3 \text{ kg}}{20 \text{ kg}} = \mathbf{0.15}$$

$$mf_{N_2} = \frac{m_{N_2}}{m_m} = \frac{5 \text{ kg}}{20 \text{ kg}} = \mathbf{0.25}$$

$$mf_{CH_4} = \frac{m_{CH_4}}{m_m} = \frac{12 \text{ kg}}{20 \text{ kg}} = \mathbf{0.60}$$

(*b*) To find the mole fractions, we need to determine the mole numbers of each component first:

$$N_{O_2} = \frac{m_{O_2}}{M_{O_2}} = \frac{3 \text{ kg}}{32 \text{ kg/kmol}} = 0.094 \text{ kmol}$$

$$N_{N_2} = \frac{m_{N_2}}{M_{N_2}} = \frac{5 \text{ kg}}{28 \text{ kg/kmol}} = 0.179 \text{ kmol}$$

$$N_{CH_4} = \frac{m_{CH_4}}{M_{CH_4}} = \frac{12 \text{ kg}}{16 \text{ kg/kmol}} = 0.750 \text{ kmol}$$

$$N_m = N_{O_2} + N_{N_2} + N_{CH_4} = 0.094 + 0.179 + 0.750 = 1.023 \text{ kmol}$$

$$y_{O_2} = \frac{N_{O_2}}{N_m} = \frac{0.094 \text{ kmol}}{1.023 \text{ kmol}} = \mathbf{0.092}$$

$$y_{N_2} = \frac{N_{N_2}}{N_m} = \frac{0.179 \text{ kmol}}{1.023 \text{ kmol}} = \mathbf{0.175}$$

$$y_{CH_4} = \frac{N_{CH_4}}{N_m} = \frac{0.750 \text{ kmol}}{1.023 \text{ kmol}} = \mathbf{0.733}$$

(*c*) The average molar mass and gas constant of the mixture are determined from their definitions,

$$M_m = \frac{m_m}{N_m} = \frac{20 \text{ kg}}{1.023 \text{ kmol}} = \mathbf{19.6 \text{ kg/kmol}}$$

$$\begin{aligned} M_m &= \sum y_i M_i = y_{O_2} M_{O_2} + y_{N_2} M_{N_2} + y_{CH_4} M_{CH_4} \\ &= (0.092)(32) + (0.175)(28) + (0.733)(16) \\ &= 19.6 \text{ kg/kmol} \end{aligned}$$

$$R_m = \frac{R_u}{M_m} = \frac{8.314 \text{ kJ/(kmol} \cdot \text{K)}}{19.6 \text{ kg/kmol}} = \mathbf{0.424 \text{ kJ/kg} \cdot \text{K}}$$

P-v-T BEHAVIOR OF GAS MIXTURES: IDEAL AND REAL GASES

The prediction of the *P-v-T* behavior of gas mixtures is usually based on two models:

Dalton's law of additive pressures: *The pressure of a gas mixture is equal to the sum of the pressures each gas would exert if it existed alone at the mixture temperature and volume.*

Amagat's law of additive volumes: *The volume of a gas mixture is equal to the sum of the volumes each gas would occupy if it existed alone at the mixture temperature and pressure.*

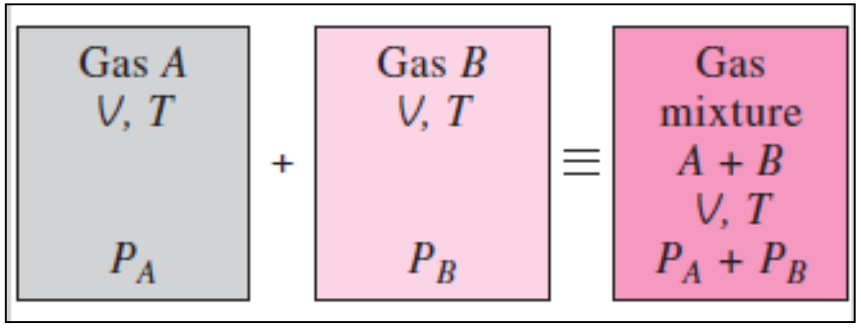

Dalton's law of additive pressures for a mixture of two ideal gases.

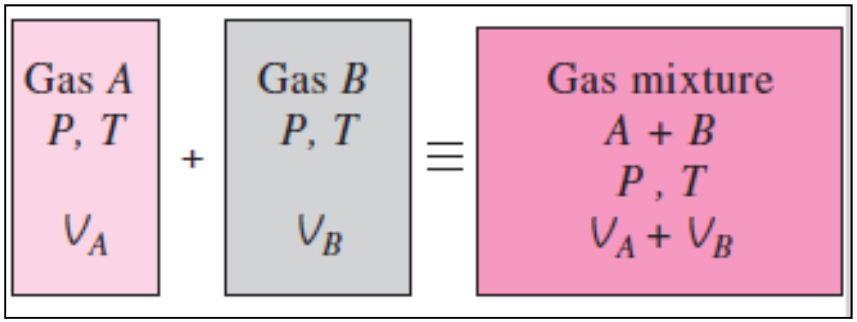

Amagat's law of additive volumes for a mixture of two ideal gases.

Dalton's law: $P_m = \sum_{i=1}^{k} P_i(T_m, V_m)$

Amagat's law: $V_m = \sum_{i=1}^{k} V_i(T_m, P_m)$

exact for ideal gases, approximate for real gases

P_i component pressure	**V_i component volume**
P_i/P_m pressure fraction	**V_i/V_m volume fraction**

For ideal gases, these two laws are identical and give identical results.

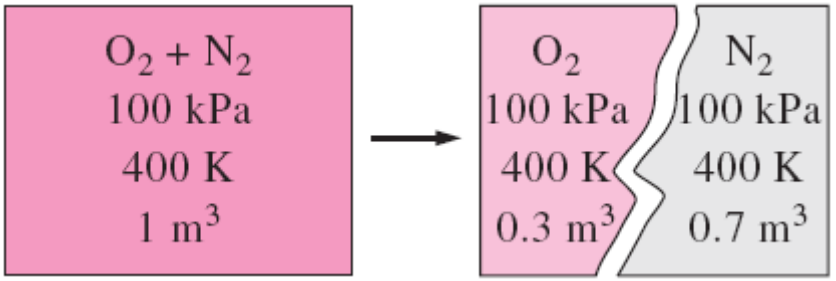

The volume a component would occupy if it existed alone at the mixture *T* and *P* is called the *component volume* (for ideal gases, it is equal to the partial volume y_iV_m).

Ideal-Gas Mixtures

$$\frac{P_i(T_m, V_m)}{P_m} = \frac{N_i R_u T_m / V_m}{N_m R_u T_m / V_m} = \frac{N_i}{N_m} = y_i$$

$$\frac{V_i(T_m, P_m)}{V_m} = \frac{N_i R_u T_m / P_m}{N_m R_u T_m / P_m} = \frac{N_i}{N_m} = y_i$$

$$\rightarrow \quad \frac{P_i}{P_m} = \frac{V_i}{V_m} = \frac{N_i}{N_m} = y_i$$

This equation is strictly valid for ideal-gas mixtures since it is derived by assuming ideal-gas behavior for the gas mixture and each of its components.

The quantity $y_i P_m$ is called the **partial pressure** (identical to the *component pressure* for ideal gases), and the quantity $y_i V_m$ is called the **partial volume**.

Note that for an ideal-gas mixture, the mole fraction, the pressure fraction, and the volume fraction of a component are identical.

The composition of an ideal-gas mixture (such as the exhaust gases leaving a combustion chamber) is frequently determined by a volumetric analysis **(Orsat Analysis)**

Real-Gas Mixtures

Compressibility factor

$$PV = ZNR_uT$$

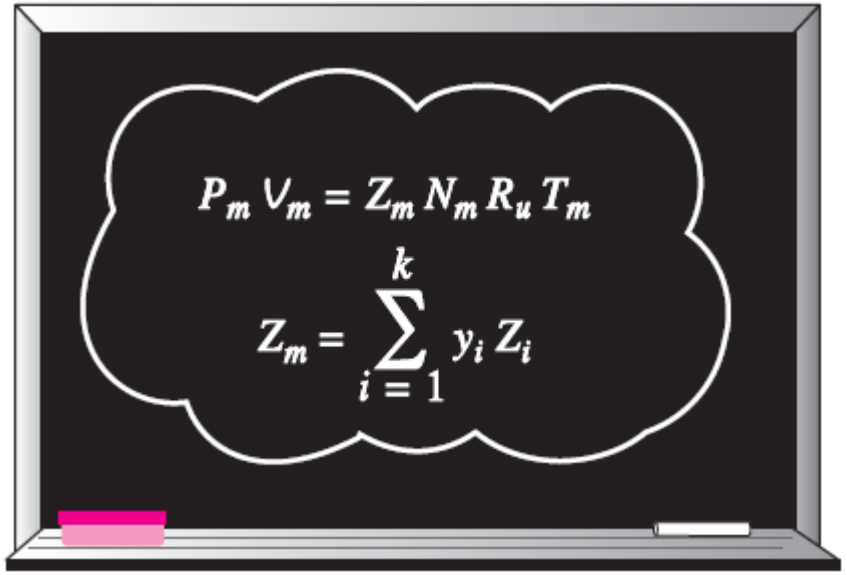

The compressibility-factor approach, in general, gives more accurate results when the Z_i's in below equation are evaluated by using Amagat's law instead of Dalton's law.

$$Z_m = \sum_{i=1}^{k} y_i Z_i$$

One way of predicting the *P-v-T* behavior of a real-gas mixture is to use compressibility factors.

Another approach for predicting the *P-v-T* behavior of a gas mixture is to treat the gas mixture as a pseudo pure substance.

One such method, proposed by W. B. Kay in 1936 and called **Kay's rule,** involves the use of a *pseudo critical pressure* and *pseudo critical temperature* for the mixture, defined in terms of the critical pressures and temperatures of the mixture components as

Kay's Rule

$$P'_{cr,m} = \sum_{i=1}^{k} y_i P_{cr,i} \quad \text{and} \quad T'_{cr,m} = \sum_{i=1}^{k} y_i T_{cr,i}$$

Pseudopure substance

$$P'_{cr,m} = \sum_{i=1}^{k} y_i P_{cr,i}$$

$$T'_{cr,m} = \sum_{i=1}^{k} y_i T_{cr,i}$$

The compressibility factor of the mixture Z_m is then easily determined by using these pseudo critical properties.

The result obtained by using Kay's rule is accurate to within about 10 % over a wide range of temperatures and pressures, which is acceptable for most engineering purposes.

Another way of predicting the *P-v-T* behavior of a real-gas mixture is to treat it as a pseudopure substance with critical properties P'_{cr} and T'_{cr}.

Example 13-2

A rigid tank contains 2 kmol of N_2 and 6 kmol of CO_2 gases at 300 K and 15 MPa. Estimate the volume of the tank on the basis of

(a) The ideal-gas equation of state,

(b) Kay's rule,

(c) Compressibility factors and Amagat's law, and

(d) Compressibility factors and Dalton's law.

2 kmol N_2
6 kmol CO_2
300 K
15 MPa
$V_m = ?$

(a) The ideal-gas equation of state,.

$$V_m = \frac{N_m R_u T_m}{P_m} = \frac{(8\text{ kmol})(8.314\text{ kPa}\cdot\text{m}^3/\text{kmol}\cdot\text{K})(300\text{ K})}{15000\text{ kPa}} = \mathbf{1.330\ m^3}$$

$$N_m = N_{N_2} + N_{CO_2} = 2 + 6 = 8\text{ kmol}$$

(b) Kay's rule

$$y_{N_2} = \frac{N_{N_2}}{N_m} = \frac{2\text{ kmol}}{8\text{ kmol}} = 0.25 \quad \text{ve} \quad y_{CO_2} = \frac{N_{CO_2}}{N_m} = \frac{6\text{ kmol}}{8\text{ kmol}} = 0.75$$

$$T'_{kr,m} = \sum y_i T_{kr,i} = y_{N_2} T_{kr,N_2} + y_{CO_2} T_{kr,CO_2}$$

$$= (0.25)(126.2\text{ K}) + (0.75)(304.2\text{ K}) = 259.7\text{ K}$$

$$P'_{kr,m} = \sum y_i P_{kr,i} = y_{N_2} P_{kr,N_2} + y_{CO_2} P_{kr,CO_2}$$

$$= (0.25)(3.39\text{ MPa}) + (0.75)(7.39\text{ MPa}) = 6.39\text{ MPa}$$

$$\left.\begin{aligned} T_R &= \frac{T_m}{T'_{\mathrm{kr},m}} = \frac{300\ \mathrm{K}}{259.7\ \mathrm{K}} = 1.16 \\ P_R &= \frac{P_m}{P'_{\mathrm{kr},m}} = \frac{15\ \mathrm{MPa}}{6.39\ \mathrm{MPa}} = 2.35 \end{aligned}\right\} Z_m = 0.49$$

$$V_m = \frac{Z_m N_m R_u T_m}{P_m} = Z_m V_{\text{mükemmel}} = (0.49)(1.330\ \mathrm{m}^3) = \mathbf{0.652\ m^3}$$

(c) Compressibility factors and Amagat's law,

$$\mathrm{N_2}: \quad \left.\begin{aligned} T_{R,\mathrm{N_2}} &= \frac{T_m}{T_{\mathrm{kr,N_2}}} = \frac{300\ \mathrm{K}}{126.2\ \mathrm{K}} = 2.38 \\ P_{R,\mathrm{N_2}} &= \frac{P_m}{P_{\mathrm{kr,N_2}}} = \frac{15\ \mathrm{MPa}}{3.39\ \mathrm{MPa}} = 4.42 \end{aligned}\right\} Z_{\mathrm{N_2}} = 1.02$$

$$\mathrm{CO_2}: \quad \left.\begin{aligned} T_{R,\mathrm{CO_2}} &= \frac{T_m}{T_{\mathrm{kr,CO_2}}} = \frac{300\ \mathrm{K}}{304.2\ \mathrm{K}} = 0.99 \\ P_{R,\mathrm{CO_2}} &= \frac{P_m}{P_{\mathrm{kr,CO_2}}} = \frac{15\ \mathrm{MPa}}{7.39\ \mathrm{MPa}} = 2.03 \end{aligned}\right\} Z_{\mathrm{CO_2}} = 0.30$$

Mixture:

$$\begin{aligned} Z_m &= \sum y_i Z_i = y_{\mathrm{N_2}} Z_{\mathrm{N_2}} + y_{\mathrm{CO_2}} Z_{\mathrm{CO_2}} \\ &= (0.25)(1.02) + (0.75)(0.30) = 0.48 \end{aligned}$$

$$V_m = \frac{Z_m N_m R_u T_m}{P_m} = Z_m V_{\text{mükemmel}} = (0.48)(1.330\ \mathrm{m}^3) = \mathbf{0.638\ m^3}$$

(d) Compressibility factors and Dalton's law

$$v_{R,N_2} = \frac{\bar{v}_{N_2}}{R_u T_{kr,N_2}/P_{cr,N_2}} = \frac{V_m/N_{N_2}}{R_u T_{kr,N_2}/P_{kr,N_2}}$$

$$= \frac{(1.33\ \text{m}^3)/(2\ \text{kmol})}{(8.314\ \text{kPa}\cdot\text{m}^3/\text{kmol}\cdot\text{K})(126.2\ \text{K})/(3390\ \text{kPa})} = 2.15$$

$$v_{R,CO_2} = \frac{(1.33\ \text{m}^3)/(6\ \text{kmol})}{(8.314\ \text{kPa}\cdot\text{m}^3/\text{kmol}\cdot\text{K})(304.2\ \text{K})/(7390\ \text{kPa})} = 0.648$$

$Z_{N_2} = 0.99$ ve $Z_{CO_2} = 0.56$

$$Z_m = y_{N_2}Z_{N_2} + y_{CO_2}Z_{CO_2} = (0.25)(0.99) + (0.75)(0.56) = 0.67$$

$$V_m = \frac{Z_m N_m R T_m}{P_m} = Z_m V_{\text{mükemmel}} = (0.67)(1.330\ \text{m}^3) = 0.891\ \text{m}^3$$

$$V_m = \mathbf{0.648\ m^3}$$

Discussion Notice that the results obtained in parts (*b*), (*c*), and (*d*) are very close. But they are very different from the values obtained from the ideal-gas relation. Therefore, treating a mixture of gases as an ideal gas may yield unacceptable errors at high pressures.

PROPERTIES OF GAS MIXTURES: IDEAL AND REAL GASES

extensive properties

$$U_m = \sum_{i=1}^{k} U_i = \sum_{i=1}^{k} m_i u_i = \sum_{i=1}^{k} N_i \bar{u}_i \qquad \text{(kJ)}$$

$$H_m = \sum_{i=1}^{k} H_i = \sum_{i=1}^{k} m_i h_i = \sum_{i=1}^{k} N_i \bar{h}_i \qquad \text{(kJ)}$$

$$S_m = \sum_{i=1}^{k} S_i = \sum_{i=1}^{k} m_i s_i = \sum_{i=1}^{k} N_i \bar{s}_i \qquad \text{(kJ/K)}$$

2 kmol A
6 kmol B
$U_A = 1000$ kJ
$U_B = 1800$ kJ
$\downarrow$
$U_m = 2800$ kJ

the changes in internal energy, enthalpy, and entropy

$$\Delta U_m = \sum_{i=1}^{k} \Delta U_i = \sum_{i=1}^{k} m_i \, \Delta u_i = \sum_{i=1}^{k} N_i \, \Delta \bar{u}_i \qquad \text{(kJ)}$$

$$\Delta H_m = \sum_{i=1}^{k} \Delta H_i = \sum_{i=1}^{k} m_i \, \Delta h_i = \sum_{i=1}^{k} N_i \, \Delta \bar{h}_i \qquad \text{(kJ)}$$

$$\Delta S_m = \sum_{i=1}^{k} \Delta S_i = \sum_{i=1}^{k} m_i \, \Delta s_i = \sum_{i=1}^{k} N_i \, \Delta \bar{s}_i \qquad \text{(kJ/K)}$$

The extensive properties of a mixture are determined by simply adding the properties of the components

intensive properties of a gas mixture

$$u_m = \sum_{i=1}^{k} \mathrm{mf}_i u_i \quad (\mathrm{kJ/kg}) \qquad \text{ve} \qquad \bar{u}_m = \sum_{i=1}^{k} y_i \bar{u}_i \quad (\mathrm{kJ/kmol})$$

$$h_m = \sum_{i=1}^{k} \mathrm{mf}_i h_i \quad (\mathrm{kJ/kg}) \qquad \text{ve} \qquad \bar{h}_m = \sum_{i=1}^{k} y_i \bar{h}_i \quad (\mathrm{kJ/kmol})$$

$$s_m = \sum_{i=1}^{k} \mathrm{mf}_i s_i \quad (\mathrm{kJ/kg \cdot K}) \qquad \text{ve} \qquad \bar{s}_m = \sum_{i=1}^{k} y_i \bar{s}_i \quad (\mathrm{kJ/kmol \cdot K})$$

$$c_{v,m} = \sum_{i=1}^{k} \mathrm{mf}_i c_{v,i} \quad (\mathrm{kJ/kg \cdot K}) \qquad \text{ve} \qquad \bar{c}_{v,m} = \sum_{i=1}^{k} y_i \bar{c}_{v,i} \quad (\mathrm{kJ/kmol \cdot K})$$

$$c_{p,m} = \sum_{i=1}^{k} \mathrm{mf}_i c_{p,i} \quad (\mathrm{kJ/kg \cdot K}) \qquad \text{ve} \qquad \bar{c}_{p,m} = \sum_{i=1}^{k} y_i \bar{c}_{p,i} \quad (\mathrm{kJ/kmol \cdot K})$$

2 kmol A
3 kmol B
$\bar{u}_A$=500 kJ/kmol
$\bar{u}_B$=600 kJ/kmol
↓
$\bar{u}_m$=560 kJ/kmol

The intensive properties of a mixture are determined by weighted averaging

Notice that *properties per unit mass involve mass fractions* (m_{fi}) *and properties per unit mole involve mole fractions* (y_i).

The relations given above are exact for ideal-gas mixtures, and approximate for real-gas mixtures.

Ideal-Gas Mixtures

Gibbs–Dalton's Law: Under the ideal-gas approximation, the properties of a gas are not influenced by the presence of other gases, and each gas component in the mixture behaves as if it exists alone at the mixture temperature T_m and mixture volume V_m.

Also, the h, u, c_v, and c_p of an ideal gas depend on temperature only and are independent of the pressure or the volume of the ideal-gas mixture.

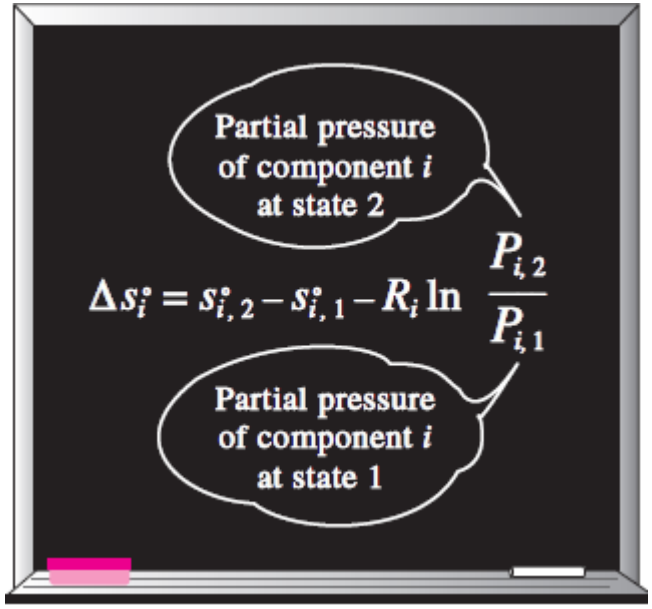

$$\Delta s_i = s_{i,2}^\circ - s_{i,1}^\circ - R_i \ln \frac{P_{i,2}}{P_{i,1}} \cong c_{p,i} \ln \frac{T_{i,2}}{T_{i,1}} - R_i \ln \frac{P_{i,2}}{P_{i,1}}$$

$$\Delta \bar{s}_i = \bar{s}_{i,2}^\circ - \bar{s}_{i,1}^\circ - R_u \ln \frac{P_{i,2}}{P_{i,1}} \cong \bar{c}_{p,i} \ln \frac{T_{i,2}}{T_{i,1}} - R_u \ln \frac{P_{i,2}}{P_{i,1}}$$

Partial pressures (not the mixture pressure) are used in the evaluation of entropy changes of ideal-gas mixtures.

$$P_{i,2} = y_{i,2} P_{m,2} \text{ ve } P_{i,1} = y_{i,1} P_{m,1}$$

Example 13-3

An insulated rigid tank is divided into two compartments by a partition. One compartment contains 7 kg of oxygen gas at 40°C and 100 kPa, and the other compartment contains 4 kg of nitrogen gas at 20°C and 150 kPa. Now the partition is removed, and the two gases are allowed to mix. Determine (*a*) the mixture temperature and (*b*) the mixture pressure after equilibrium has been established.

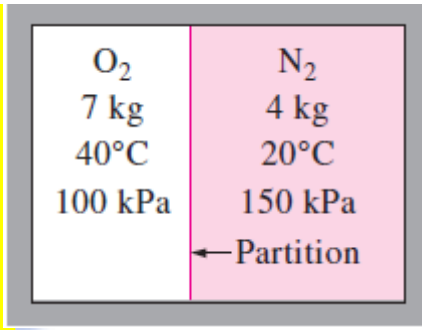

(a) the mixture temperature

$$E_g - E_ç = \Delta E_{sistem}$$

$$0 = \Delta U = \Delta U_{N_2} + \Delta U_{O_2}$$

$$[mc_v(T_m - T_1)]_{N_2} + [mc_v(T_m - T_1)]_{O_2} = 0$$

$$(4\text{ kg})(0.743\text{ kJ/kg}\cdot\text{K})(T_m - 20°\text{C}) + (7\text{ kg})(0.658\text{ kJ/kg}\cdot\text{K})(T_m - 40°\text{C}) = 0$$

$$T_m = \mathbf{32.2°C}$$

(*b*) The final pressure of the mixture is determined from the ideal-gas relation

$$P_m V_m = N_m R_u T_m$$

$$N_{O_2} = \frac{m_{O_2}}{M_{O_2}} = \frac{7\text{ kg}}{32\text{ kg/kmol}} = 0.219\text{ kmol}$$

$$N_{N_2} = \frac{m_{N_2}}{M_{N_2}} = \frac{4\text{ kg}}{28\text{ kg/kmol}} = 0.143\text{ kmol}$$

$$N_m = N_{O_2} + N_{N_2} = 0.219 + 0.143 = 0.362 \text{ kmol}$$

$$V_{O_2} = \left(\frac{NR_uT_1}{P_1}\right)_{O_2} = \frac{(0.219 \text{ kmol})(8.314 \text{ kPa}\cdot\text{m}^3/\text{kmol}\cdot\text{K})(313 \text{ K})}{100 \text{ kPa}} = 5.70 \text{ m}^3$$

$$V_{N_2} = \left(\frac{NR_uT_1}{P_1}\right)_{N_2} = \frac{(0.143 \text{ kmol})(8.314 \text{ kPa}\cdot\text{m}^3/\text{kmol}\cdot\text{K})(293 \text{ K})}{150 \text{ kPa}} = 2.32 \text{ m}^3$$

$$V_m = V_{O_2} + V_{N_2} = 5.70 + 2.32 = 8.02 \text{ m}^3$$

$$P_m = \frac{N_mR_uT_m}{V_m} = \frac{(0.362 \text{ kmol})(8.314 \text{ kPa}\cdot\text{m}^3/\text{kmol}\cdot\text{K})(305.2 \text{ K})}{8.02 \text{ m}^3} = \mathbf{114.5 \text{ kPa}}$$

Discussion We could also determine the mixture pressure by using $P_mV_m = m_mR_mT_m$, where R_m is the apparent gas constant of the mixture. This would require a knowledge of mixture composition in terms of mass or mole fractions.

Example 13–4

An insulated rigid tank is divided into two compartments by a partition. One compartment contains 3 kmol of O_2, and the other compartment contains 5 kmol of CO_2. Both gases are initially at 25°C and 200 kPa. Now the partition is removed, and the two gases are allowed to mix. Assuming the surroundings are at 25°C and both gases behave as ideal gases, determine the entropy change and exergy destruction associated with this process.

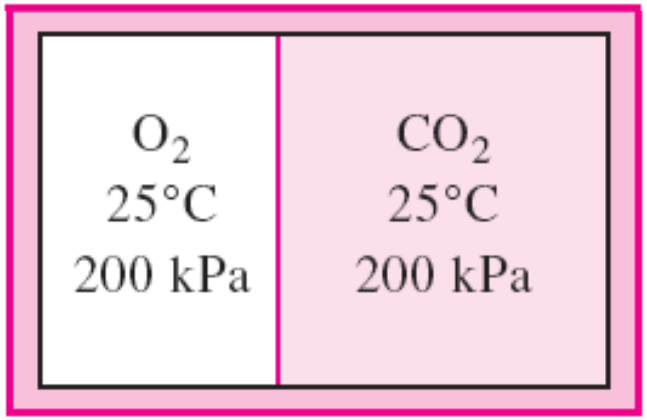

$P_{m,2}=P_{i,1}=200$ kPa

$$\Delta S_m = \sum \Delta S_i = \sum N_i \, \Delta \bar{s}_i = \sum N_i \left(\bar{c}_{p,i} \ln \frac{T_{i,2}}{T_{i,1}} \cancelto{0}{} - R_u \ln \frac{P_{i,2}}{P_{i,1}} \right)$$

$$= -R_u \sum N_i \ln \frac{y_{i,2} P_{m,2}}{P_{i,1}} = -R_u \sum N_i \ln y_{i,2}$$

$$N_m = N_{O_2} + N_{CO_2} = (3 + 5)\ \text{kmol} = 8\ \text{kmol}$$

$$y_{O_2} = \frac{N_{O_2}}{N_m} = \frac{3\ \text{kmol}}{8\ \text{kmol}} = 0.375 \qquad y_{CO_2} = \frac{N_{CO_2}}{N_m} = \frac{5\ \text{kmol}}{8\ \text{kmol}} = 0.625$$

$$\Delta S_m = -R_u(N_{O_2} \ln y_{O_2} + N_{CO_2} \ln y_{CO_2})$$

$$= -(8.314\ \text{kJ/kmol}\cdot\text{K})[(3\ \text{kmol})(\ln 0.375) + (5\ \text{kmol})(\ln 0.625)] = \mathbf{44.0\ kJ/K}$$

The exergy destruction associated with this mixing process is determined from

$$X_{\text{yok olan}} = T_0 S_{\text{üretim}} = T_0 \Delta S_{\text{sistem}}$$

$$= (298\ \text{K})(44.0\ \text{kJ/K}) = \mathbf{13.1\ MJ}$$

Gerçek Gaz Karışımları

Bir gaz karışımı için T ds bağıntısı

$$dh_m = T_m\, ds_m + v_m\, dP_m$$

$$d\left(\sum \mathrm{mf}_i h_i\right) = T_m\, d\left(\sum \mathrm{mf}_i s_i\right) + \left(\sum \mathrm{mf}_i v_i\right) dP_m$$

$$\sum \mathrm{mf}_i (dh_i - T_m\, ds_i - v_i\, dP_m) = 0$$

$$dh_i = T_m\, ds_i + v_i\, dP_m$$

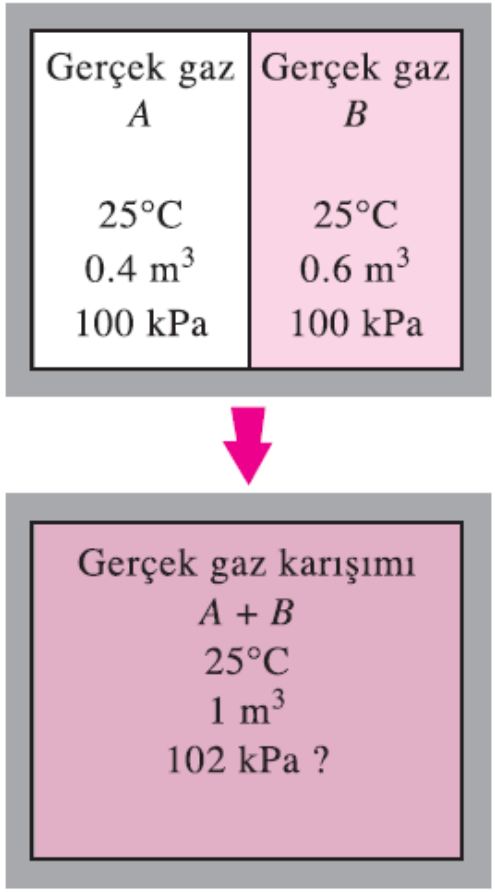

Gerçek gaz karışımlarının davranışlarını belirlemek zordur, çünkü birbirinden farklı moleküllerin karşılıklı etkilerini göz önüne almak gerekir.

$$dh_i = T_m\, ds_i + v_i\, dP_m$$

Denklem entalpi ve entropi için genelleştirilmiş bağıntıları ve diyagramları geliştirmenin başlangıç noktasıdır. Ayrıca gerçek gazlar için geliştirilen genelleştirilmiş özelik bağıntılarının ve diyagramlarının, gerçek gaz karışımını oluşturan gazlar için de kullanılabileceğini belirtmektedir.

Fakat her karışım için indirgenmiş sıcaklık, T_R ve indirgenmiş basınç P_m, karışım sıcaklığı T_m ve karışım basıncı P_m'de hesaplanmalıdır.

Karışım basıncı ve sıcaklığı yerine karışım hacim ve sıcaklığı verilirse izlenecek olan yol, Dalton'un toplanan basınçlar yasasını kullanarak yaklaşık bir karışım basıncı belirlemektir.

Gerçek bir gaz karışımının özeliklerini belirlemenin bir başka yolu da, karışımı sanki-kritik özelikleri olan, sanki-saf bir madde gibi ele almaktır. Burada sanki-kritik özelikler, karışanların kritik özeliklerinden Kay kuralını kullanarak belirlenir.

Örnek 13-5

Hava genellikle N_2 ve O_2'den oluşan bir karışı›m olarak ele alınır. Bu karışımda N_2 ve 0_2'nin mol oranları sırasıyla % 79 ve % 21'dir. Sürekli akışlı bir açık sistemde, hava 10 MPa sabit basınçta, 220 K'den 160 K sıcaklığa soğutulmaktadır. Havadan çevreye olan ısı geçişini, (a) mükemmel gaz yaklaşımıyla, (b) Kay kuralını kullanarak, (c) Amagat yasasını kullanarak hesaplayın..

$$e_g - e_ç = \Delta e_{sistem}^{\nearrow 0} = 0 \rightarrow e_g = e_ç \rightarrow \bar{h}_1 = \bar{h}_2 + \bar{q}_ç$$

$$\bar{q}_ç = \bar{h}_1 - \bar{h}_2 = y_{N_2}(\bar{h}_1 - \bar{h}_2)_{N_2} + y_{O_2}(\bar{h}_1 - \bar{h}_2)_{O_2}$$

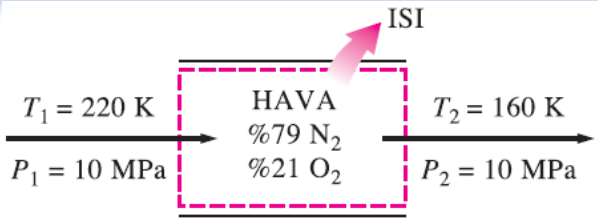

$$\bar{h}_1 - \bar{h}_2 = \bar{h}_{1,mük} - \bar{h}_{2,mük} - R_u T_{kr}(Z_{h1} - Z_{h2})$$

(a) N_2, O_2 karışımının mükemmel gaz olduğu kabul edilirse

$$T_1 = 220\ \text{K} \rightarrow \bar{h}_{1,mük,N_2} = 6391\ \text{kJ/kmol}$$

$$\bar{h}_{1,mük,O_2} = 6404\ \text{kJ/kmol}$$

$$T_2 = 160\ \text{K} \rightarrow \bar{h}_{2,mük,N_2} = 4648\ \text{kJ/kmol}$$

$$\bar{h}_{2,mük,O_2} = 4657\ \text{kJ/kmol}$$

$$\begin{aligned}\bar{q}_ç &= y_{N_2}(\bar{h}_1 - \bar{h}_2)_{N_2} + y_{O_2}(\bar{h}_1 - \bar{h}_2)_{O_2} \\ &= (0.79)(6391 - 4648)\ \text{kJ/kmol} + (0.21)(6404 - 4657)\ \text{kJ/kmol} \\ &= \mathbf{1744\ kJ/kmol}\end{aligned}$$

(b) Kay kuralına göre, sanki-saf bir madde gibi davranan bir gaz karışımının kritik sıcaklığı ve basıncı;

$$T'_{\mathrm{kr},m} = \sum y_i T_{\mathrm{kr},i} = y_{\mathrm{N_2}} T_{\mathrm{kr,N_2}} + y_{\mathrm{O_2}} T_{\mathrm{kr,O_2}}$$
$$= (0.79)(126.2\ \mathrm{K}) + (0.21)(154.8\ \mathrm{K}) = 132.2\ \mathrm{K}$$

$$P'_{\mathrm{kr},m} = \sum y_i P_{\mathrm{kr},i} = y_{\mathrm{N_2}} P_{\mathrm{kr,N_2}} + y_{\mathrm{O_2}} P_{\mathrm{kr,O_2}}$$
$$= (0.79)(3.39\ \mathrm{MPa}) + (0.21)(5.08\ \mathrm{MPa}) = 3.74\ \mathrm{MPa}$$

$$T_{R,1} = \frac{T_{m,1}}{T_{\mathrm{kr},m}} = \frac{220\ \mathrm{K}}{132.2\ \mathrm{K}} = 1.66$$

$$\left.P_R = \frac{P_m}{P_{\mathrm{kr},m}} = \frac{10\ \mathrm{MPa}}{3.74\ \mathrm{MPa}} = 2.67\right\} Z_{h_1,m} = 1.0$$

$$\left.T_{R,2} = \frac{T_{m,2}}{T_{\mathrm{kr},m}} = \frac{160\ \mathrm{K}}{132.2\ \mathrm{K}} = 1.21\right\} Z_{h_2,m} = 2.6$$

$$\bar{h}_{m_1,\text{mük}} = y_{N_2}\bar{h}_{1,\text{mük},N_2} + y_{O_2}\bar{h}_{1,\text{mük},O_2}$$
$$= (0.79)(6391\ \text{kJ/kmol}) + (0.21)(6404\ \text{kJ/kmol})$$
$$= 6394\ \text{kJ/kmol}$$
$$\bar{h}_{m_2,\text{mük}} = y_{N_2}\bar{h}_{2,\text{mük},N_2} + y_{O_2}\bar{h}_{2,\text{mük},O_2}$$
$$= (0.79)(4648\ \text{kJ/kmol}) + (0.21)(4657\ \text{kJ/kmol})$$
$$= 4650\ \text{kJ/kmol}$$

$$\bar{q}_{ç} = (\bar{h}_{m_1,\text{mük}} - \bar{h}_{m_2,\text{mük}}) - R_u T_{kr}(Z_{h_1} - Z_{h_2})_m$$
$$= [(6394 - 4650)\ \text{kJ/kmol}] - (8.314\ \text{kJ/kmol}\cdot\text{K})(132.2\ \text{K})(1.0 - 2.6)$$
$$= \mathbf{3503\ kJ/kmol}$$

(c) N_2 ve O_2 için, ilk ve son hallerde, entalpi sapma çarpanları

N_2:

$$T_{R_1,N_2} = \frac{T_{m,1}}{T_{kr,N_2}} = \frac{220\ \text{K}}{126.2\ \text{K}} = 1.74$$
$$\left.P_{R,N_2} = \frac{P_m}{P_{kr,N_2}} = \frac{10\ \text{MPa}}{3.39\ \text{MPa}} = 2.95\right\} \quad Z_{h_1,N_2} = 0.9$$
$$\left.T_{R_2,N_2} = \frac{T_{m,2}}{T_{kr,N_2}} = \frac{160\ \text{K}}{126.2\ \text{K}} = 1.27\right\} \quad Z_{h_2,N_2} = 2.4$$

O_2:

$$T_{R_1,O_2} = \frac{T_{m,1}}{T_{kr,O_2}} = \frac{220\ \text{K}}{154.8\ \text{K}} = 1.42$$

$$\left.P_{R,O_2} = \frac{P_m}{P_{kr,O_2}} = \frac{10\ \text{MPa}}{5.08\ \text{MPa}} = 1.97\right\} \quad Z_{h_1,O_2} = 1.3$$

$$\left.T_{R_1,O_2} = \frac{T_{m,2}}{T_{kr,O_2}} = \frac{160\ \text{K}}{154.8\ \text{K}} = 1.03\right\} \quad Z_{h_2,O_2} = 4.0$$

$$\begin{aligned}(\bar{h}_1 - \bar{h}_2)_{N_2} &= (\bar{h}_{1,\text{mük}} - \bar{h}_{2,\text{mük}})_{N_2} - R_u T_{kr}(Z_{h_1} - Z_{h_2})_{N_2} \\ &= [(6391 - 4648)\ \text{kJ/kmol}] - (8.314\ \text{kJ/kmol}\cdot\text{K})(126.2\ \text{K})(0.9 - 2.4) \\ &= 3317\ \text{kJ/kmol}\end{aligned}$$

$$\begin{aligned}(\bar{h}_1 - \bar{h}_2)_{O_2} &= (\bar{h}_{1,\text{mük}} - \bar{h}_{2,\text{mük}})_{O_2} - R_u T_{kr}(Z_{h_1} - Z_{h_2})_{O_2} \\ &= [(6404 - 4657)\ \text{kJ/kmol}] - (8.314\ \text{kJ/kmol}\cdot\text{K})(154.8\ \text{K})(1.3 - 4.0) \\ &= 5222\ \text{kJ/kmol}\end{aligned}$$

$$\begin{aligned}\bar{q}_{ç} &= y_{N_2}(\bar{h}_1 - \bar{h}_2)_{N_2} + y_{O_2}(\bar{h}_1 - \bar{h}_2)_{O_2} \\ &= (0.79)(3317\ \text{kJ/kmol}) + (0.21)(5222\ \text{kJ/kmol}) \\ &= \mathbf{3717\ kJ/kmol}\end{aligned}$$