1. Set the blocking device **A** on the main starting valve in the BLOCKED position.

   Engage the turning gear **B**.

   Close the fuel oil inlet valve **C**.

   Close the cooling water inlet valve **D**.

   Close the cooling water outlet valve **E**.

   Open the cooling water drain cocks **F** and **G**.

   Shut off the control air and safety air supply. Vent the manoeuvring system through the ball valve.

   Also shut off the air supply on the reduction unit for the hydraulic/pneumatic exhaust valve, and vent the system.

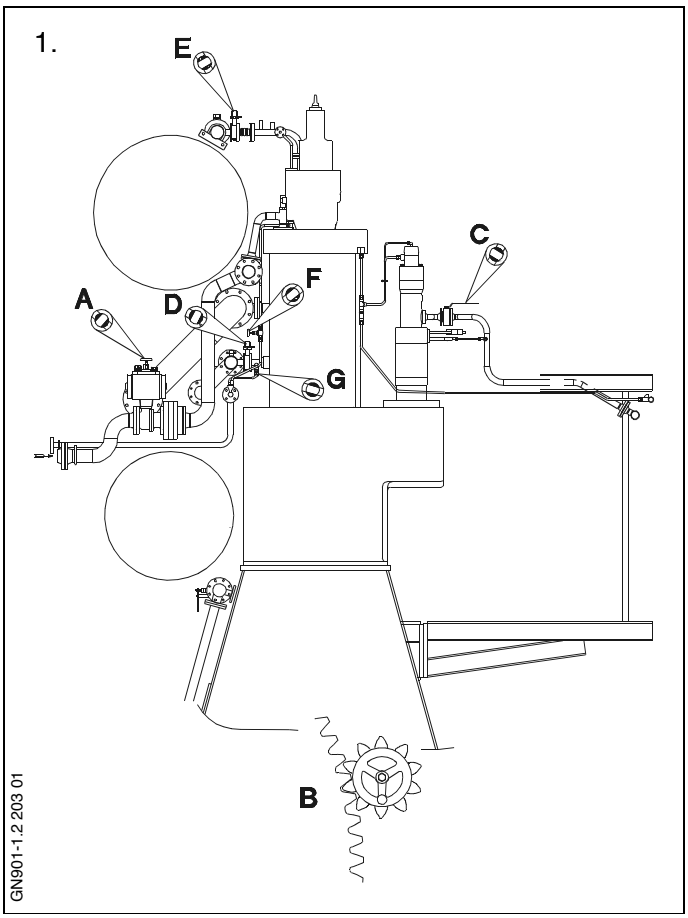

< Data

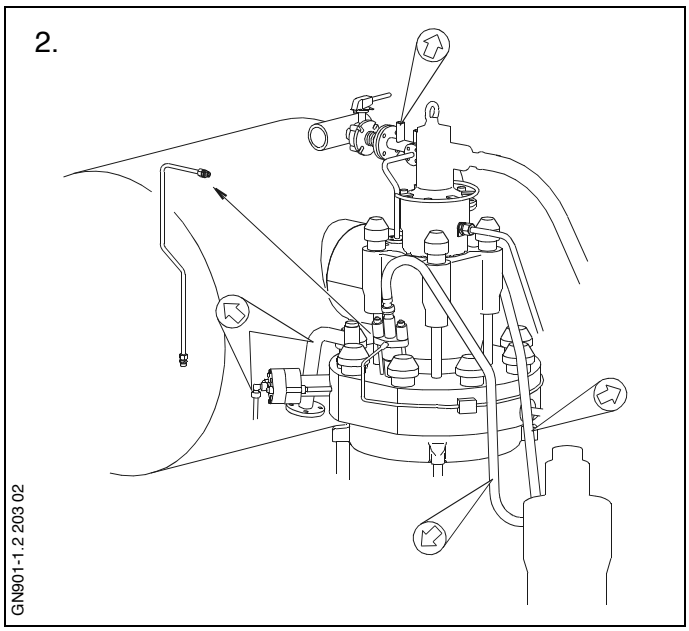

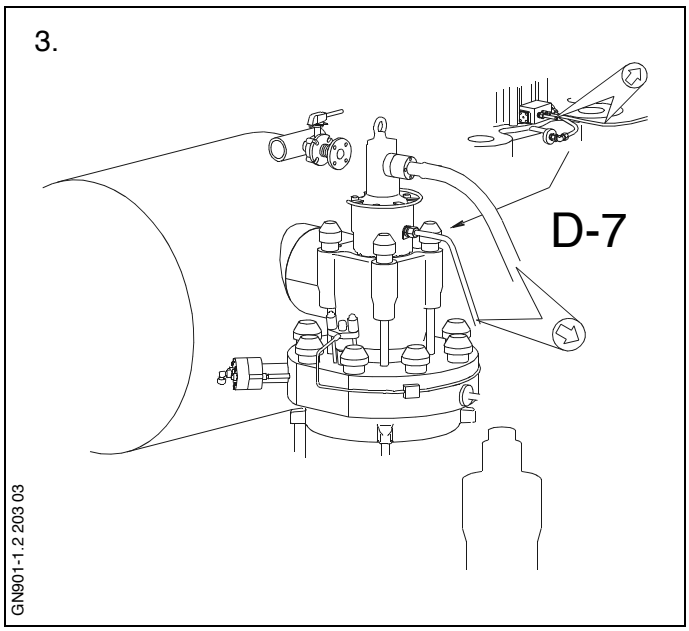

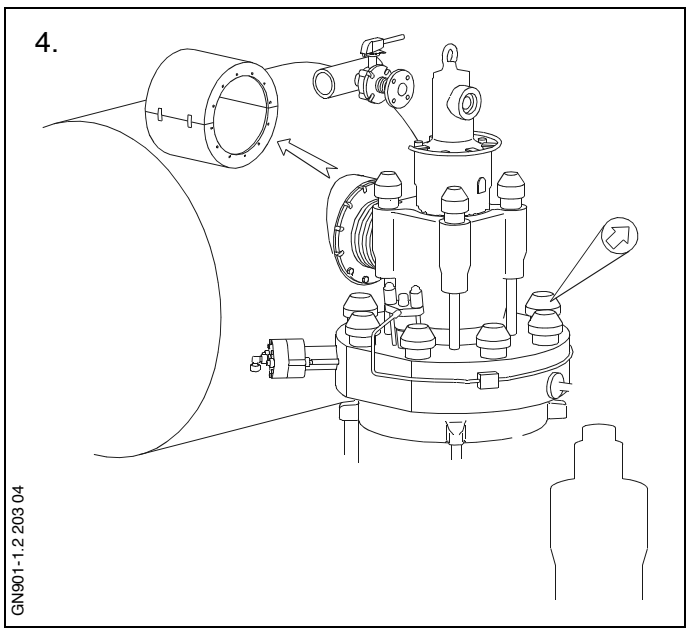

2. Remove the cooling water inlet and outlet pipes from the exhaust valve and cylinder cover.

   Remove the drain pipe from the intermediate pipe between the cylinder cover and the exhaust valve.

   Dismount the fuel oil high-pressure pipes between the fuel valves and pump.

   Dismount the control air pipe from the starting valve.

   Remove the starting air pipe.

3. Remove the screws which fasten the high-pressure pipe to the oil cylinder on the exhaust valve and the hydraulic activator, and lift the high-pressure pipe away.

   Dismount the drain oil pipe between the exhaust valve and the hydraulic activator, the air pipe for the pneumatic exhaust valve, and the pipes for the sealing air arrangement.

4. Remove the protective jacket enclosing the intermediate pipe between the exhaust receiver and the exhaust valve.

   Dismount the screws in the flange between the intermediate pipe and the exhaust receiver. The four lowermost screws need not be dismantled, just loosened.

   Remove the protective caps from the cylinder cover nuts.

5. Place eight spacer rings over the nuts, and screw the eight hydraulic jacks onto the studs.

   Connect the high-pressure pump to the jacks by means of the distributor block and the high-pressure hoses.

   Using the vent screws of the hydraulic nuts, vent the system and increase the pressure as stated in Data.
   For operation of the hydraulic tools, see Chapter 913-1.

   Loosen the nuts by applying the tommy bar through the slots in the spacer rings.

   Relieve the system of pressure.

   Disconnect the high-pressure hoses from the jacks.

   Finally, remove the hydraulic jacks and spacer rings, and unscrew the nuts.

6. Hook the engine room crane on to the lifting attachment on top of the exhaust valve.

   Lift away the cylinder cover complete, and land it on a couple of wooden planks.

7. Remove and discard the sealing ring between cylinder cover and cylinder liner.

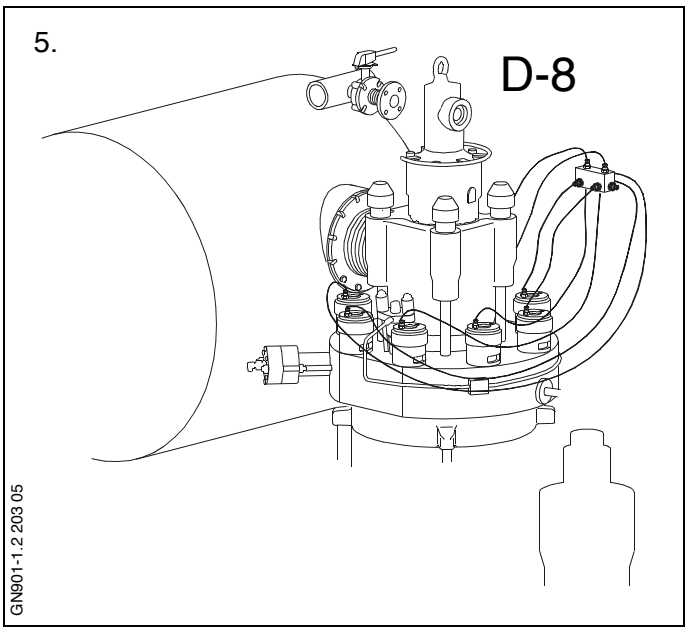

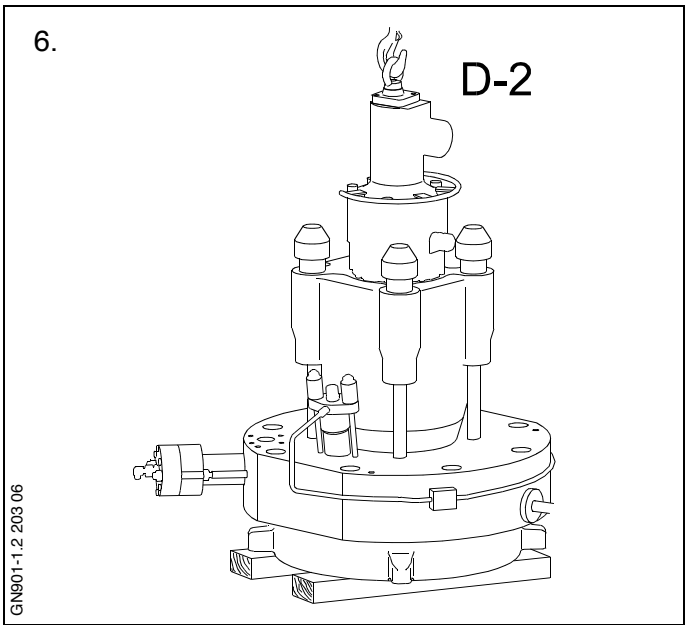

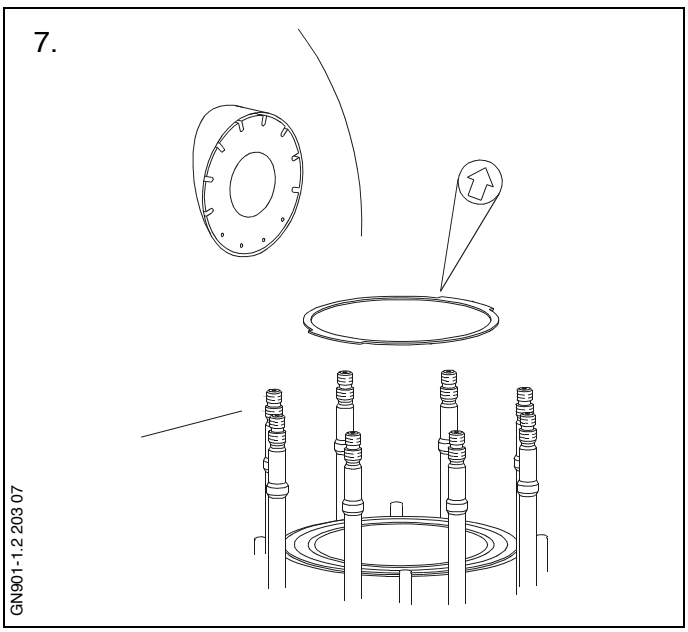

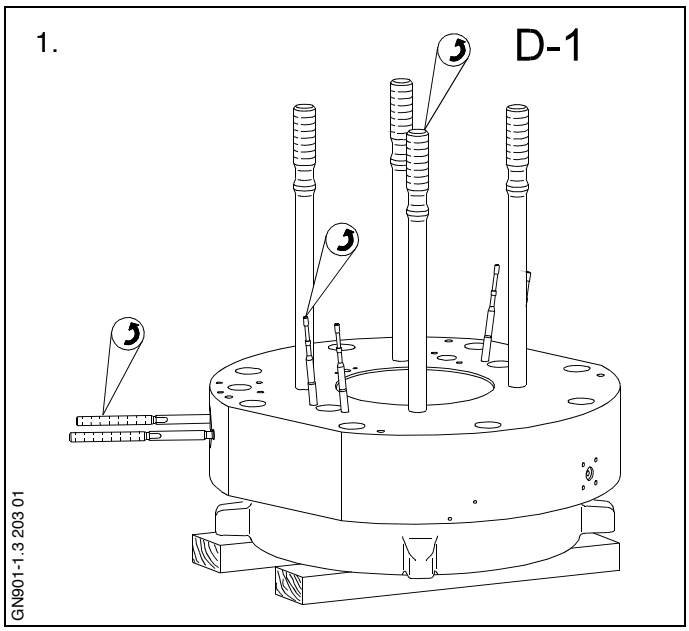

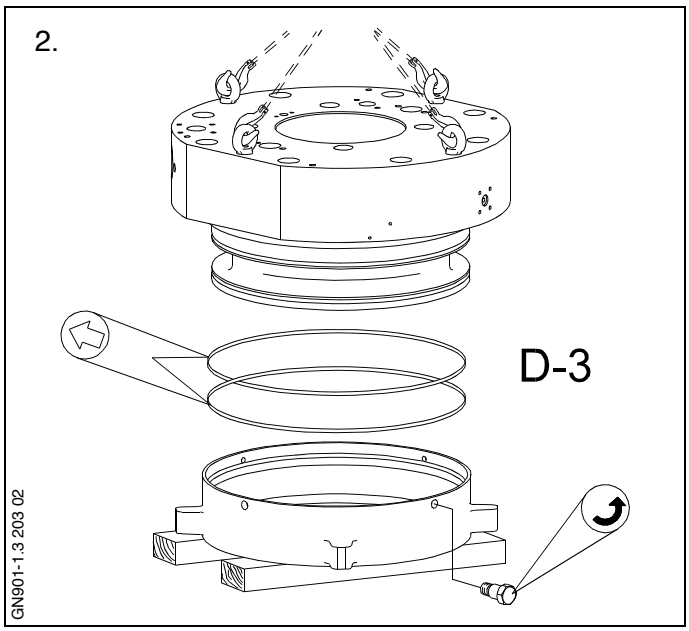

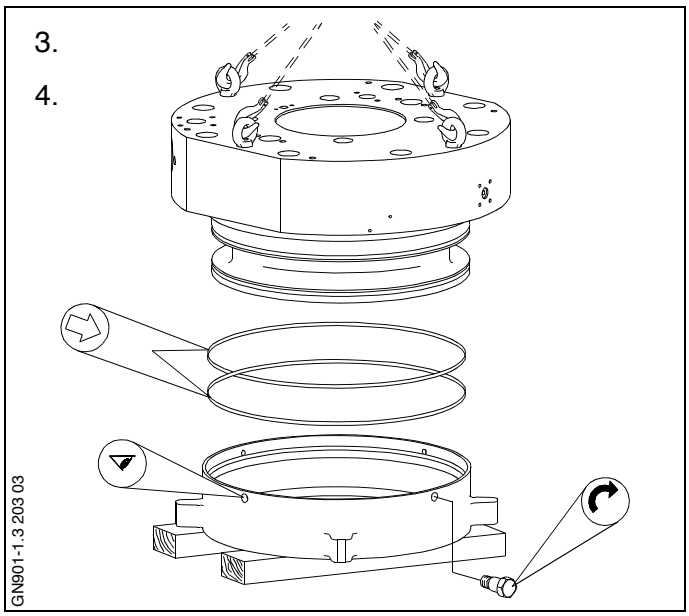

1. Dismount all valves and pipes on the cylinder cover.

   Dismount all studs on the top of the cylinder cover.

2. Unscrew the four screws which secure the cooling jacket to the cylinder cover.

   Lift the cylinder cover free of the cooling jacket and land it on a couple of planks.

   If the cooling jacket sticks, use dismantling screws to force the jacket/cover apart.

3. Remove and discard the O-rings from the cover, and carefully clean the cooling jacket and the cylinder cover.

   Provide the cylinder cover with new O-rings, well lubricated with oil.

4. Lift the cylinder cover and guide the jacket/cover into position, using the guide pin as reference (camshaft side).

   Mount and tighten the screws for the cooling jacket.

5. Recondition the valve bores as follows:

Fuel valve bore

6. The tool consists of a common spindle with handle, and of a guide, a carbon cutter, a seating face cutter, and a grinding mandrel.

   Clean the fuel valve bores, using the carbon cutter. If required, recondition the fuel valve seating with the appropriate cutter.

   Grind the seating with the grinding mandrel and a grinding compound (e.g. Carborundum No. 200).

   After the milling/grinding, clean the bore and seating carefully, and check that the seating is not damaged.

Exhaust valve bore

7. The tool consists of a spindle with handle and a grinding disc.

   After cleaning the valve bore and seating, grind the seating with the grinding disc and a grinding compound (e.g. Carborundum No. 200).

   After the grinding, clean the bore and seating carefully, and check that the seating is not damaged.

5.

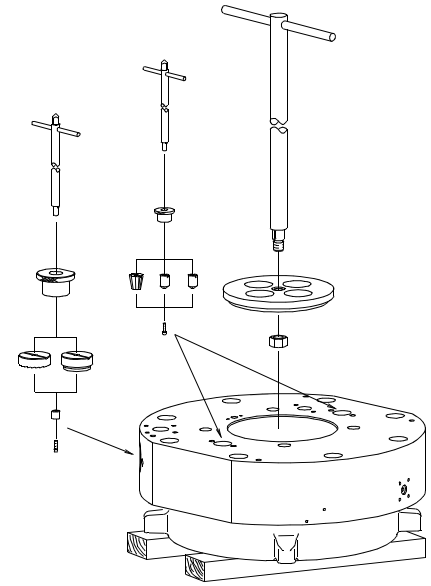

GN901-1.3 203 05

6.

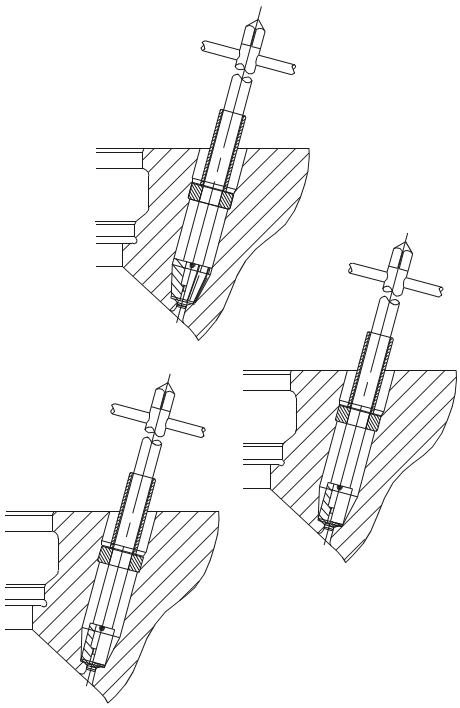

GN901-1.3 203 06

7.

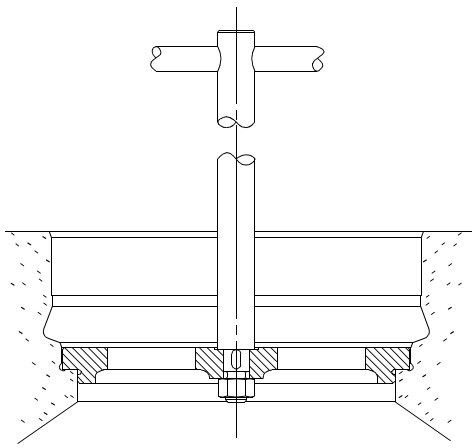

GI901-3.1 98 05

< Data

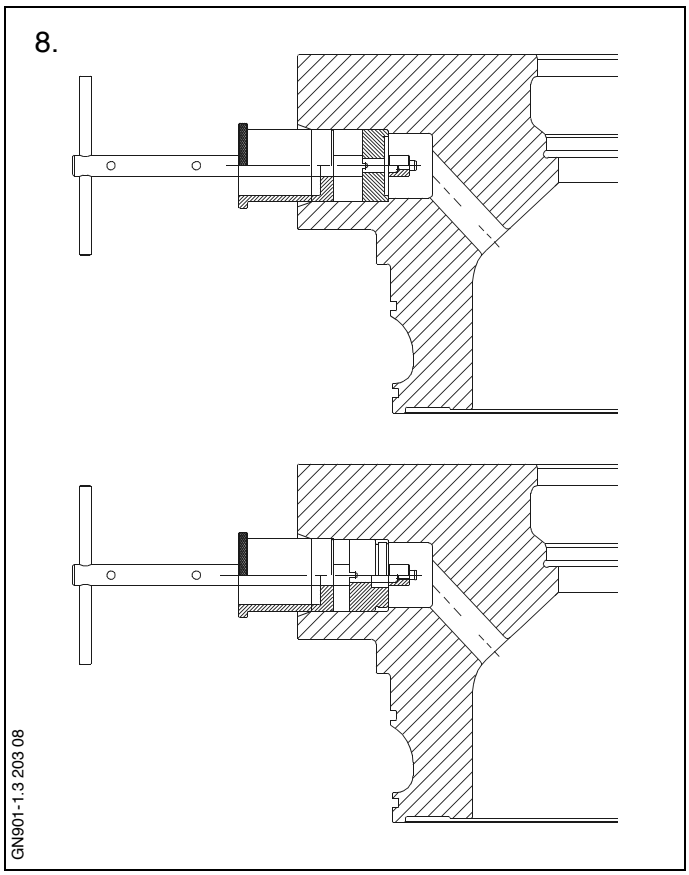

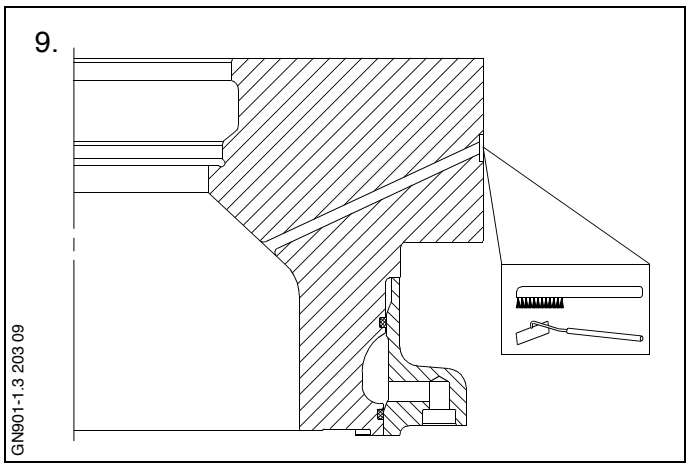

Starting valve bore

8. The tool consists of a guide, a cutter, and a grinding disc.

   Recondition the starting valve bore and seating in the same way as described for the fuel valve bore.

   When replacing valves on a cylinder cover that is mounted on the engine, recondition the valve bores/seating in the same way as described here, but without dismounting the studs.

9. Clean the bores for safety valve/indicator cock.

10. Lubricate the threads with ‘Never Seize' or Molybdenum Disulphide (MoS_2) and mount the valve studs.

    Tighten up the studs in accordance with the screwing-in torque stated on the data sheet.

    Fill up the grooves between the valve studs and the bores for the valve studs with permatex to prevent water or oil from entering the bores during operation of the engine.

    Provide the water connection flanges with new gaskets, and keep the cylinder cover ready for replacement.

    Always fit new or overhauled valves before a cylinder cover is mounted on the engine.

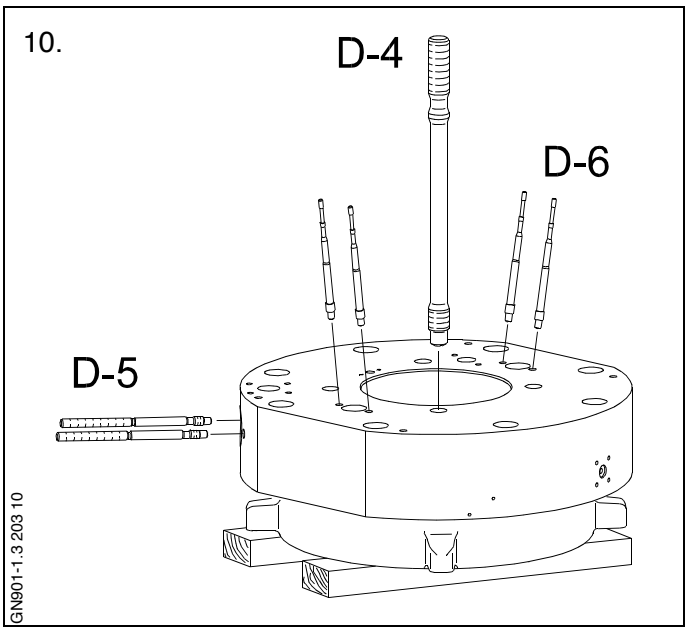

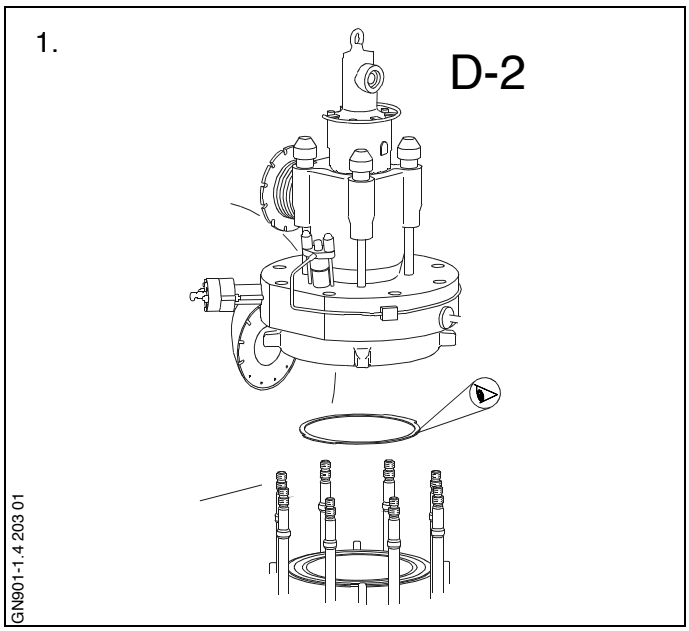

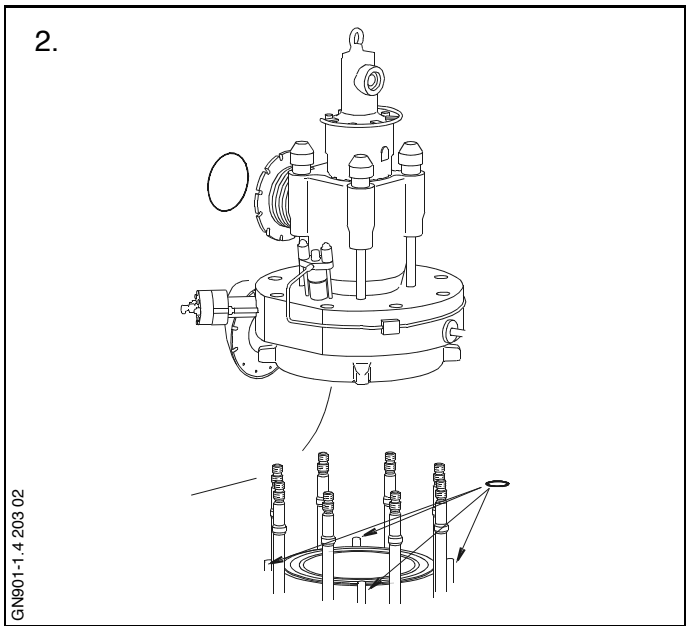

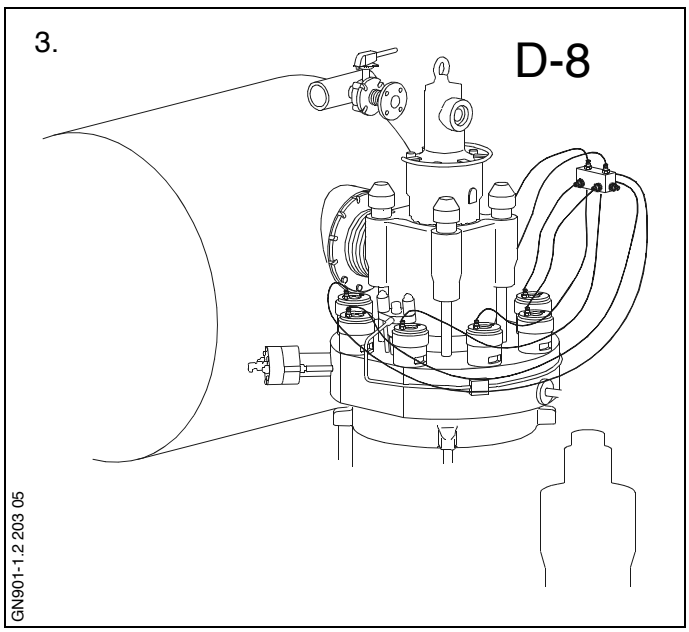

1. Place a new sealing ring on top of the cylinder liner with the guide tabs in the fore and aft direction.

   This is to ensure that the tabs fit into the two gas blow-out grooves milled in the cylinder cover guide recess.

2. Lift the cylinder cover by means of the crane and **carefully** wipe the contact surface which faces the cylinder liner.

   Provide the cooling water connecting pipes with new O-rings and lubricate them with grease or soft soap.

   Mount a new ‘klinger’ sealing ring in the groove of the flange of the intermediate pipe.

   Lower the cover **carefully** into position.

   During the landing, **carefully** check that the cooling water connecting pipes engage correctly with the holes in the cooling jacket.

3. Mount the cover nuts on the studs and screw down.

   Place eight spacer rings, one around each nut, and mount the eight hydraulic jacks on the studs.

   Connect the high-pressure pump to the jacks by means of the distributor block and the high-pressure hoses.

   Use the vent screws of the hydraulic nuts to vent the system, and then increase the pressure as stated in Data.
   For operation of the hydraulic tools, see Chapter 913-1.

   Tighten the nuts by applying the tommy bar through the slots in the spacer rings.

   Relieve the system of pressure.

   Finally, remove the hydraulic jacks and spacer rings from the nuts.

4. Mount the protective caps on the cylinder cover studs.

   Align the intermediate pipe so that the holes in the flange of the intermediate pipe are in line with the threaded holes in the exhaust receiver .

   Mount the screws of the flange between the intermediate pipe and the exhaust receiver.

Note!
Lubricate the screws with 'Never Seize' or Molybdenum Disulphide (MoS_2) before mounting.

5. Mount the insulating jacket around the intermediate pipe.

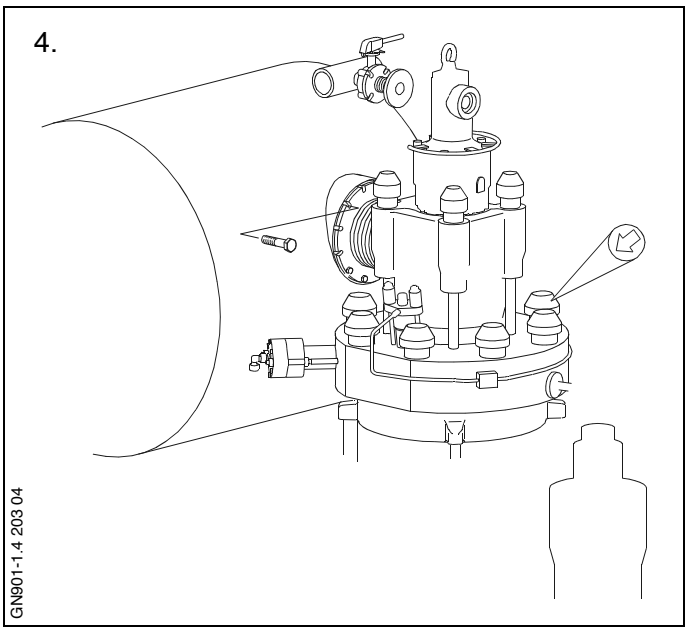

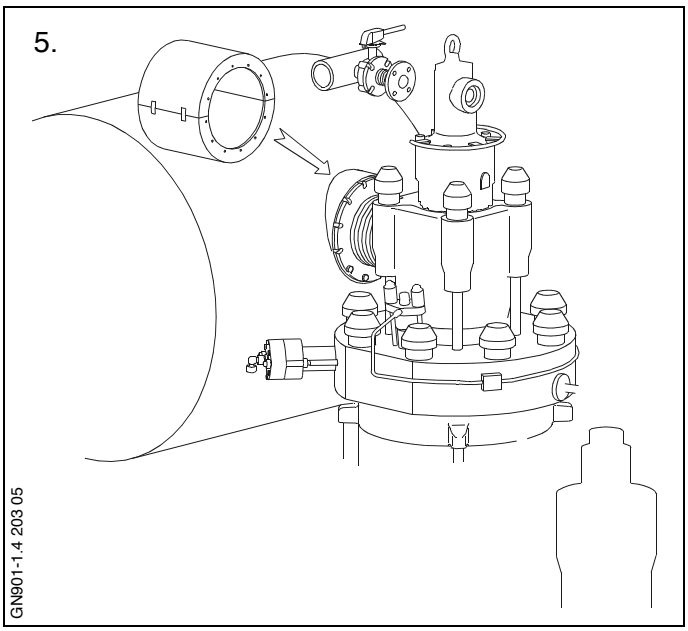

< Data

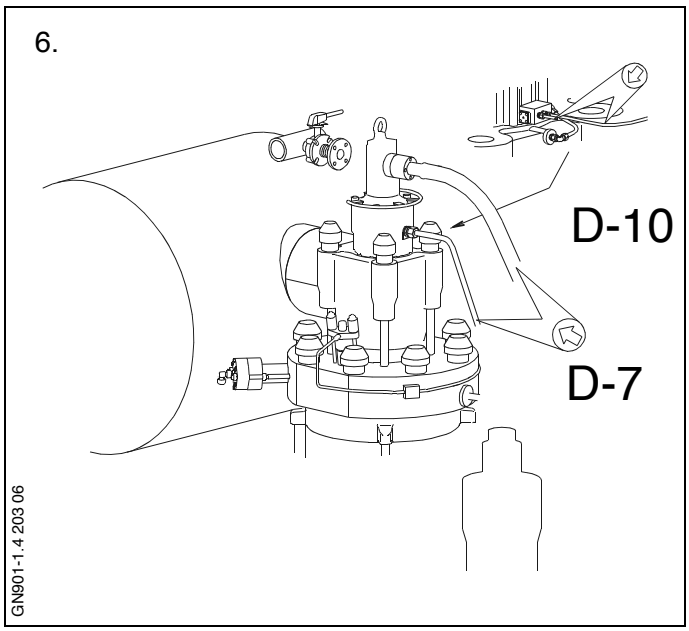

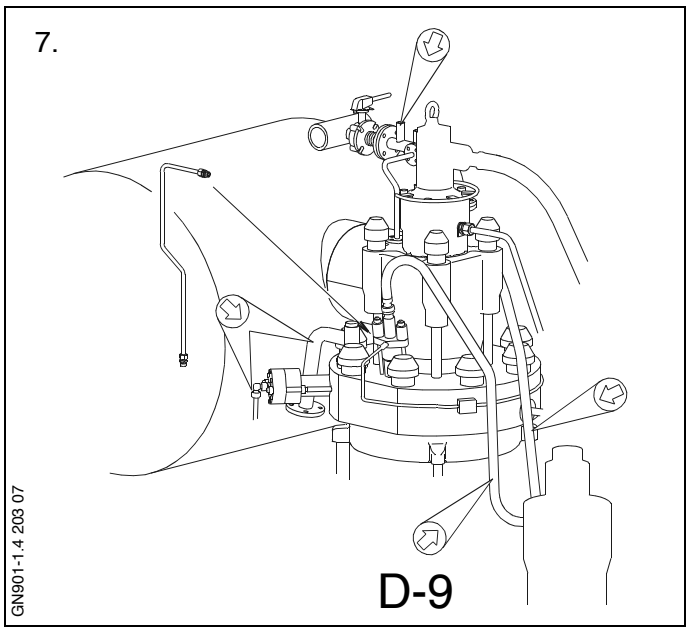

6. Mount the return oil pipe, the sealing air pipe and the air pipe for pneumatic closing of the exhaust valve.

   Mount the high-pressure pipe for the hydraulic valve gear.
   See Procedure 908-1.4.

7. Mount the starting air pipe and control air pipe for the starting valve.

   Mount the cooling water inlet and outlet pipes on the exhaust valve.

   Mount the drain pipe on the intermediate pipe between the exhaust valve and the cylinder cover.

   Using a crowfoot wrench and torque spanner, mount the fuel oil high-pressure pipes between the fuel pump and the fuel valves (checking that the pipes fit properly at the seats and that all parts are clean and provided with new O-rings). *See Procedure 909-14.4.*

   Connect the outlet pipe from the return oil pipe on the fuel valves.

   Shut the drain valves and open the cooling water inlet. After venting the cylinder section, shut the vent cocks and open the cooling water outlet valve.

   Open the fuel oil, lubricating oil and air supplies to the alarm system.

Caution !
The air supply to the exhaust valve must always be connected **before** starting the camshaft oil pumps. This is **very** important, because otherwise the valve will open more than normal.