1. When replacing the hydraulic high-pressure pipe, exhaust valve or hydraulic actuator, check the high-pressure pipe sealing surfaces.

2. Before dismounting the high-pressure pipe, stop the camshaft oil pump.

   Loosen the screws for the high-pressure pipe and lift the pipe slightly away from the actuator to let the oil in the pipe drain through the drain holes in the actuator.

3. Remove the screws in both ends of the high-pressure pipe. Lift the high-pressure pipe away from the engine.

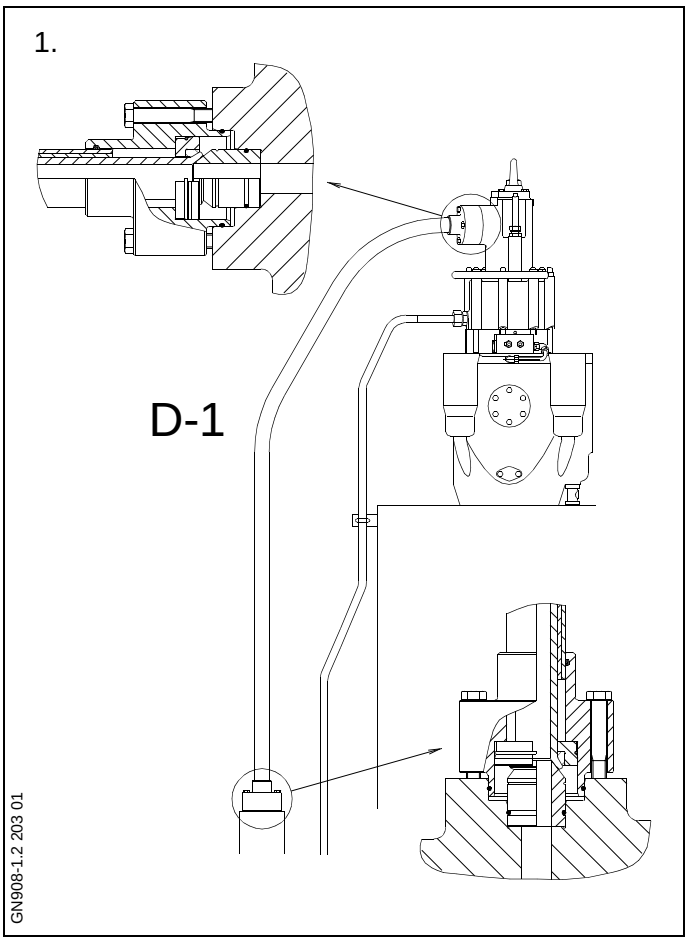

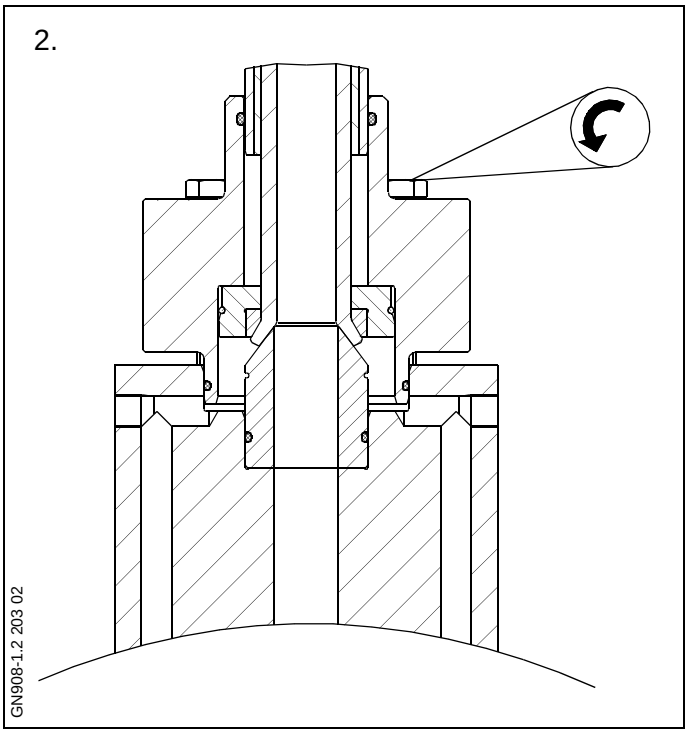

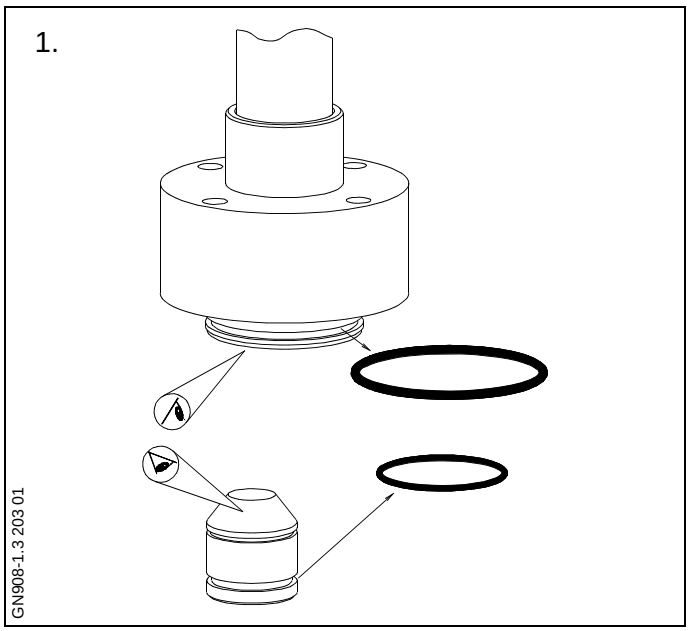

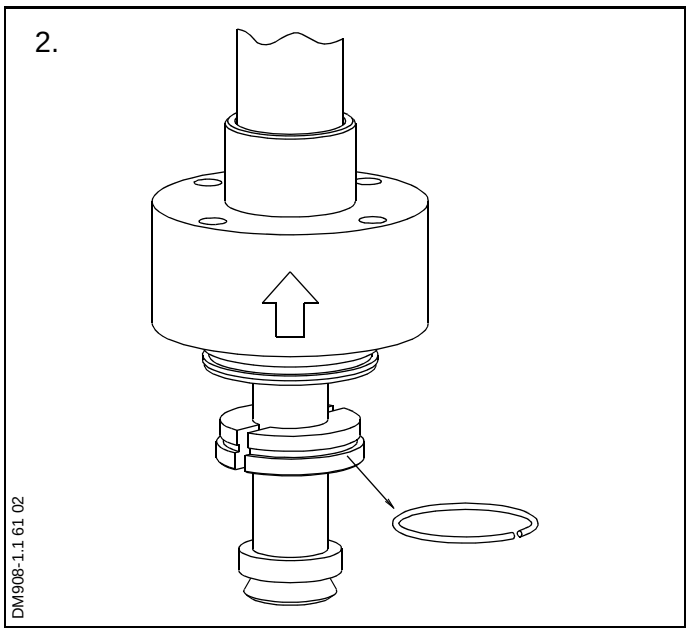

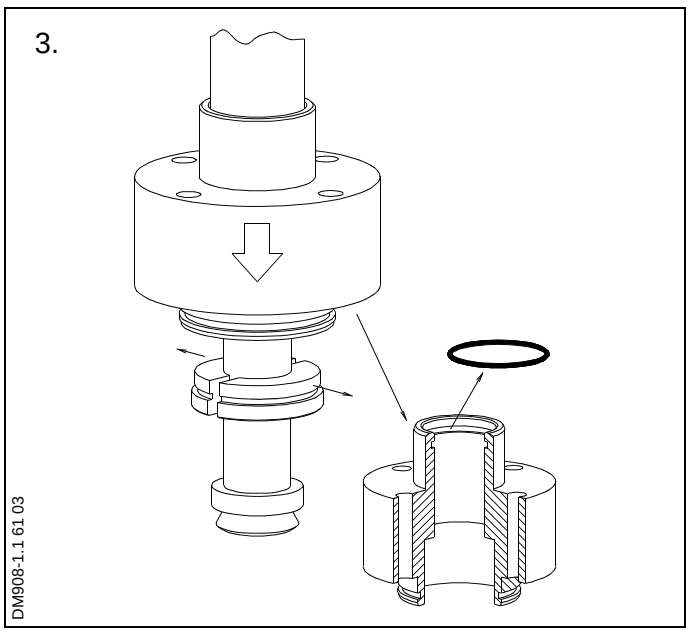

The two ends of the pipe are identical and should both be overhauled as follows:

1. Remove the thrust piece from the actuator/ exhaust valve.

   Remove and discard the O-rings from the thrust piece and the thrust flange.

   Clean and inspect the conical seats of the high-pressure pipe and the thrust piece.

Note!
The seats cannot be reconditioned. If a seat is damaged, the thrust piece/ high-pressure pipe must be replaced.

2. To change the internal O-ring, proceed as follows:

   Lift the thrust flange upwards.

   Remove the spring ring from the two-part sleeve.

3. Remove the thrust flange from the pipe end.

   Remove and discard the internal O-rings.

   Mount new internal O-rings lubricated with a little camshaft lubricating oil.

4. Assemble the high-pressure pipe in the reverse order to disassembling.

1. Mount new O-rings, lubricated with a little camshaft lubricating oil, on the thrust pieces and thrust flanges.

   Mount the thrust pieces on the actuator/exhaust valve.

   Mount the high-pressure pipe on the engine.

Note!
When mounting the high-pressure pipe, take care not to damage the conical seats of the pipe/thrust pieces.

2. After fitting the pipe to the exhaust valve and actuator, tighten up the screws of the pressure flanges diagonally, *see Data.*

3. Check the system for tightness.

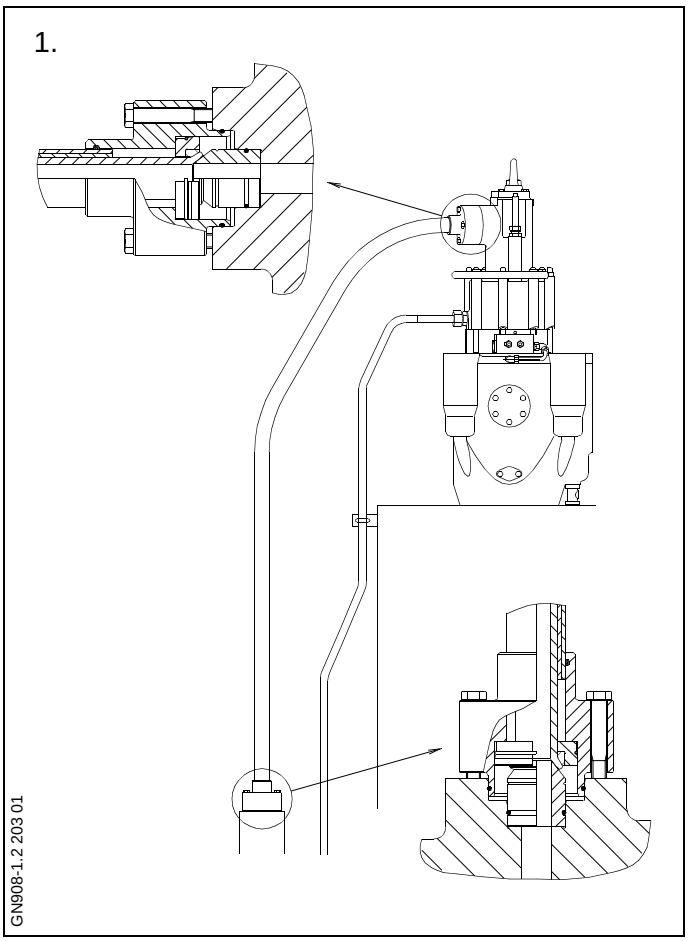

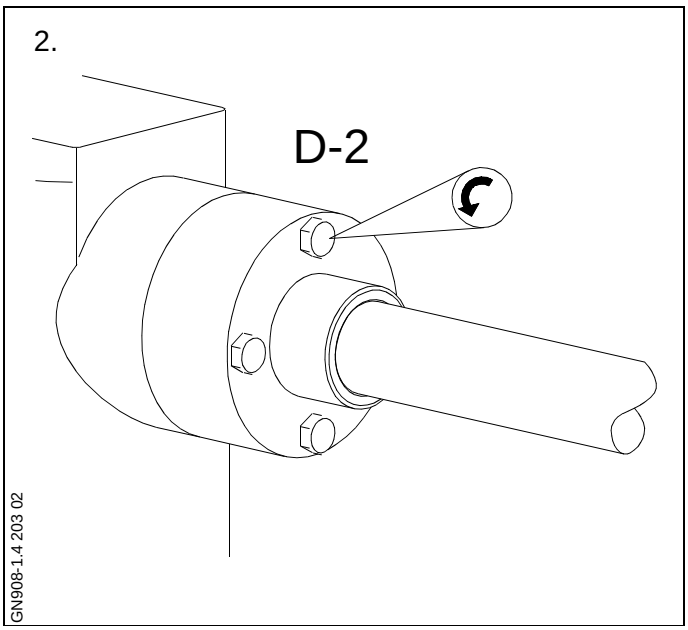

< Data