1. The non-return valve **A** is built into the oil inlet pipe to the actuator.

   To check the valve, disconnect and clean it and connect a supply of working air (7 bar) to the outlet side of the valve (the side facing the actuator). If an air flow is felt at the inlet side of the valve, it must be overhauled.

   During the starting sequence in ASTERN direction, the exhaust valve will start to open while the cylinder is still being supplied with starting air.

   The puncture valve **B** will delay opening of the exhaust valve until the starting air sequence has finished.

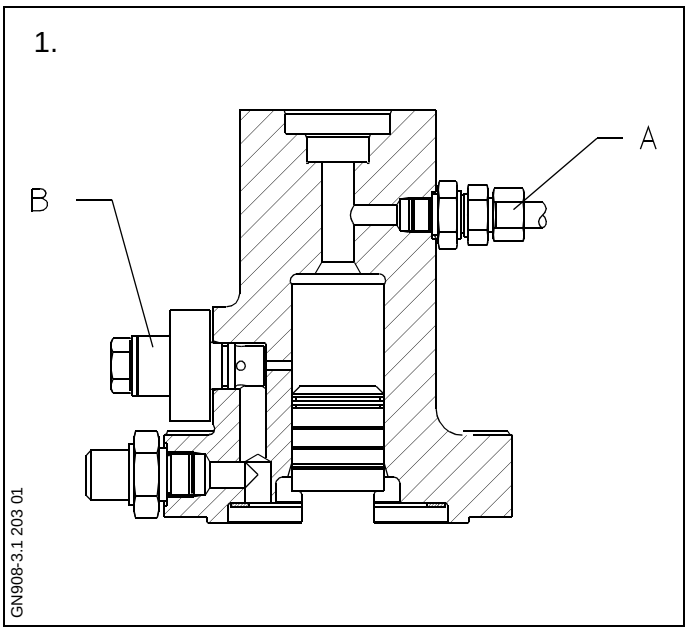

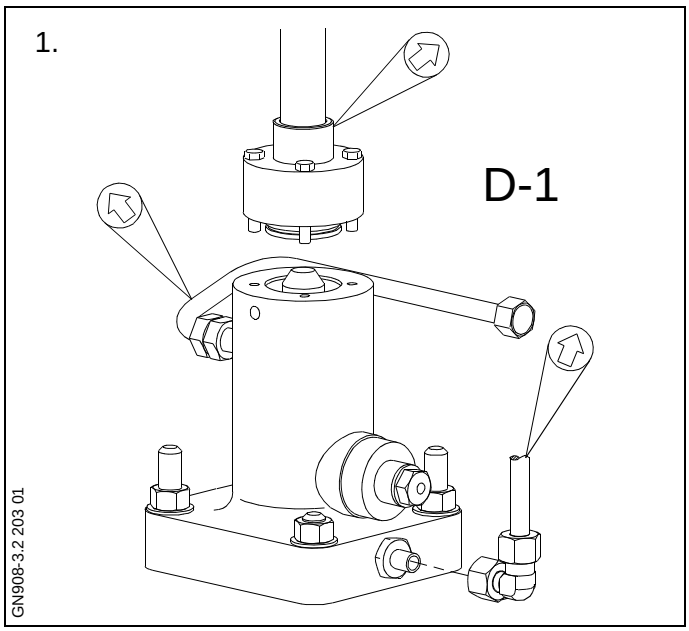

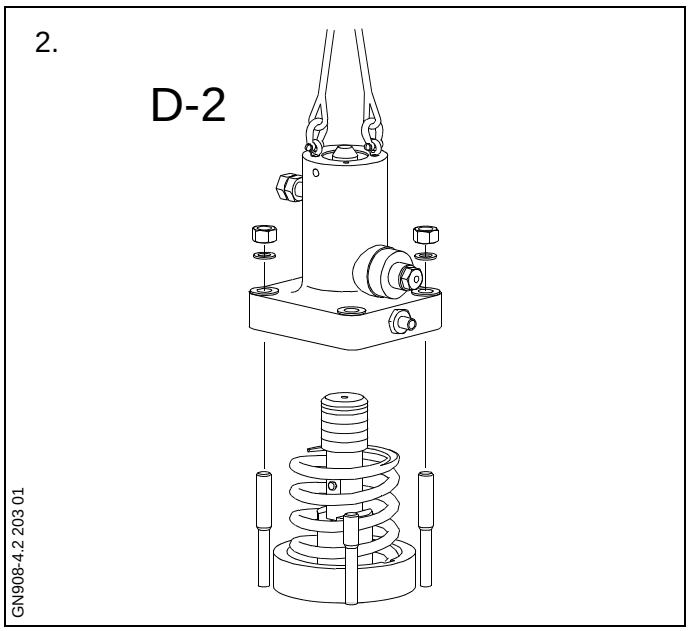

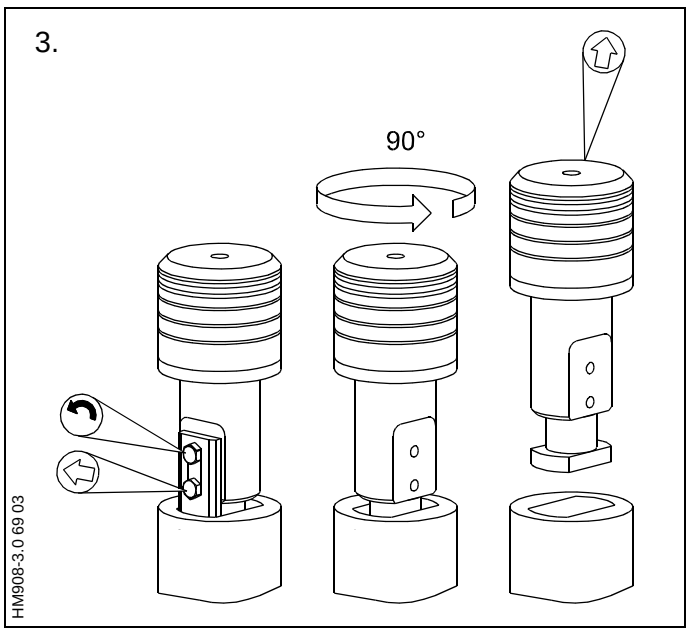

1. Stop the engine and shut off the oil supply.

   Turn the camshaft so that the roller rests on the circular part of the cam.

   Remove the inspection cover of the camshaft housing to inspect the position of the exhaust cam.

   Dismount the inlet pipe and the drain pipe from the exhaust valve.

   Dismount the screws of the high-pressure pipe flange, and lift away the high-pressure pipe. *See Data D-1.*
   See Procedure 908-1.2

2. Fit eye screws in the lifting holes of the actuator housing and hook on a tackle.

   Unscrew the nuts on the two short studs, then loosen the nuts on the long studs successively until the tension of the roller guide spring is relieved.

   Dismount the nuts and lift the housing carefully up, leaving the piston on the top of the roller guide.

   Remove the spring.

3. Remove the locking plate for the piston. Turn the piston **90°** to free it from the bayonet joint.

   Remove the piston from the roller guide.

1. Clean the piston in kerosene and blow dry with compressed air.

   Take off the piston rings and check them for wear. If the ring thickness has worn down to the minimum *(see Data D-4)*, discard the rings and mount new ones.

   Check that the **TOP** mark on the piston rings faces upwards when mounting.

   Inspect the sliding surfaces of the piston for scratching or seizure marks.

2. Clean the oil cylinder and inspect the bores for deposits.

   Check the bore of the oil cylinder for possible scores and measure it for wear.

   If the bore is seized or has worn down to the measurement stated in *Data D-3*, send the oil cylinder to an MAN B&W authorised workshop for reconditioning.

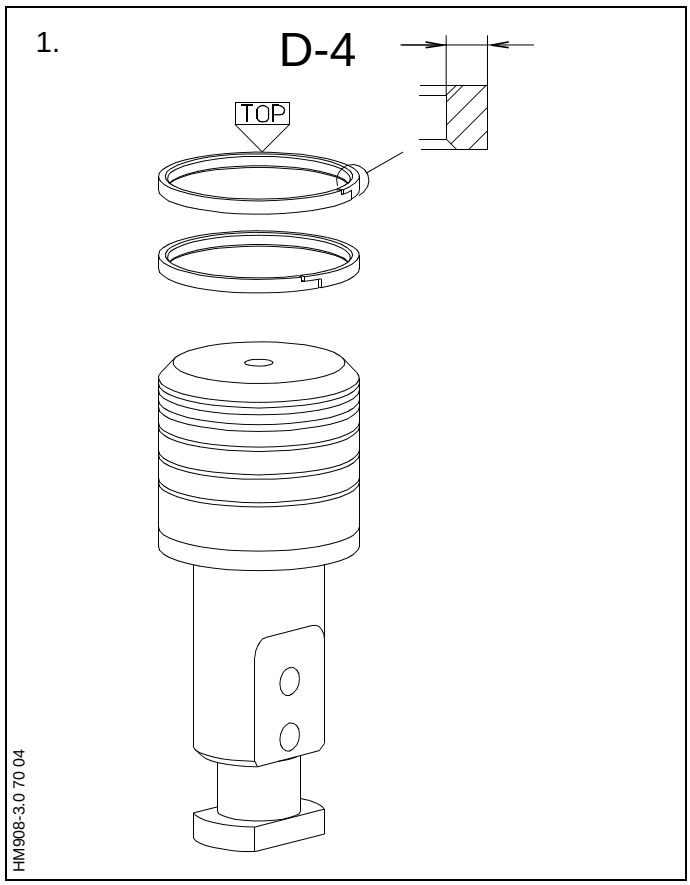

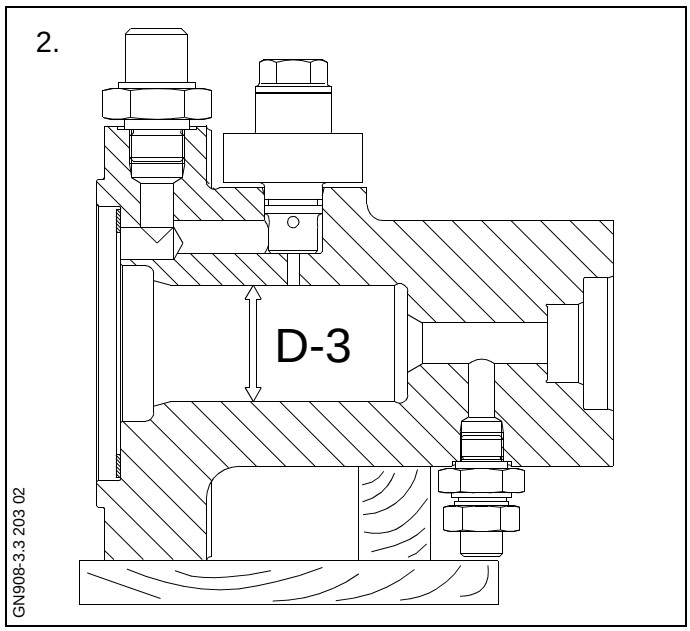

< Data

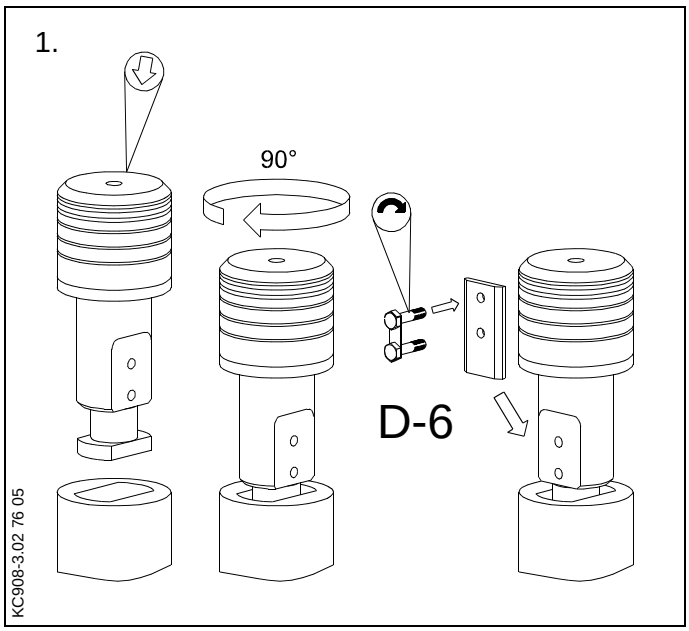

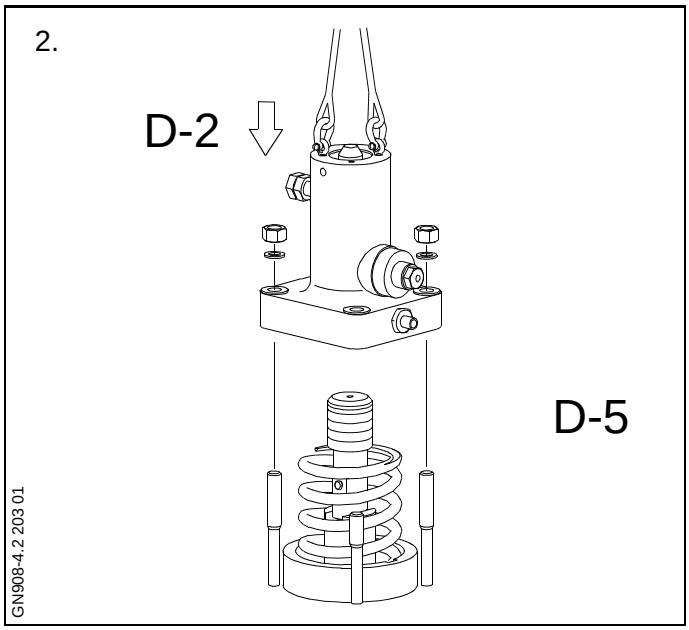

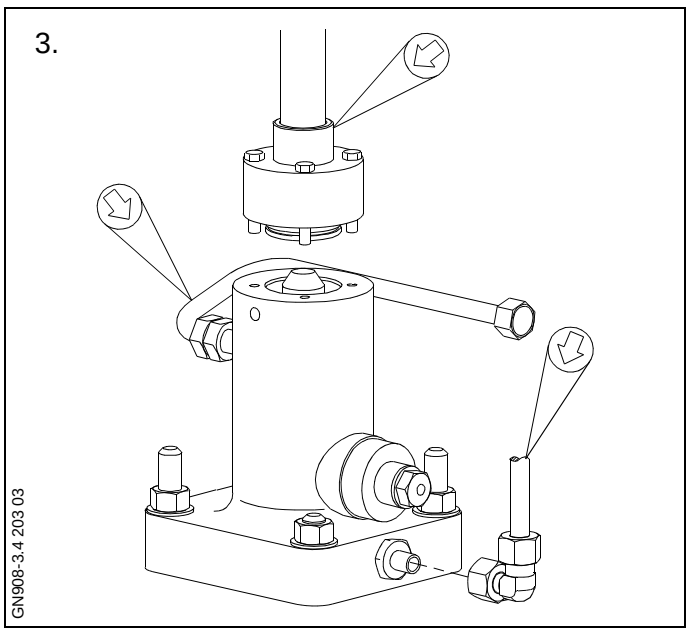

1. Mount the actuator piston in the roller guide and turn **90°** to lock it in the bayonet joint.

   Mount the locking plate and tighten as stated in Data D-6. Lubricate the piston with plenty of camshaft lubricating oil.

2. Mount the spring on the roller guide. Carefully lower the actuator housing on to the piston, taking care not to damage the piston rings.

   Mount the washers and the nuts on the two long studs and tighten alternately until the actuator housing rests firmly against the roller guide housing.

   Mount the washers and nuts on the two short studs. Tighten all four nuts as stated in Data D-5.

3. Mount the oil inlet pipe and the drain pipe from the exhaust valve.

   Mount the hydraulic high pressure pipe.
   See Procedure 908-1.4