SAFETY PRECAUTIONS

X	Stopped engine
X	Block the starting mechanism
X	Shut off starting air supply
X	Engage turning gear
X	Shut off cooling water
	Shut off fuel oil
X	Shut off lubricating oil
X	Lock turbocharger rotors

Data

Ref.	Description	Value Unit
D-1	Exhaust valve, complete	450 kg
D-2	Exhaust valve housing	370 kg
D-3	Oil cylinder	80 kg
D-4	Air cylinder	75 kg
D-5	Spindle	44 kg
D-6	Bottom piece	52 kg
D-7	Oil cylinder, inside diameter max.	71.2 mm
D-8	Piston rings, min. thickness	2.6 mm
D-9	Min. distance to piston	47.0 mm
D-10	Max. distance to piston	51.2 mm
D-11	Min. diameter of spindle stem	59.8 mm
D-12	Tightening torque, oil cylinder	70 Nm
D-13	Tightening torque, screws for lifting bolt	50 Nm
D-14	Tightening torque, safety valve	50 Nm
D-15	Opening pressure, safety valve	21 bar
D-16	Offset angle, spindle	5.5 °
D-17	Vertical grinding angle – spindle/housing seat	30 °
D-18	Max. grinding of seat	2.3 mm
D-19	Gap of bottom piece	1.0 mm
D-20	Max. burn-off of spindle	8.0 mm
D-21	Max. grinding of spindle	2.0 mm
D-22	Hydraulic pressure – dismantling	1500-1650 bar
D-23	Hydraulic pressure – mounting	1500 bar
D-24	Max. diameter, top	60.6 mm
D-25	Max. diameter, bottom	62.0 mm

Standard Tools: See Section 913

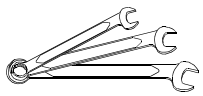

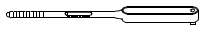

10–120 Nm

2 x M10, 2 x M12

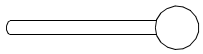

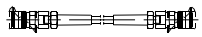

4 x 1 m, 1 x 3 m

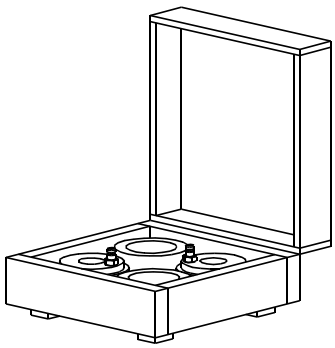

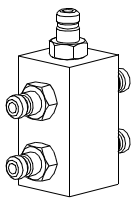

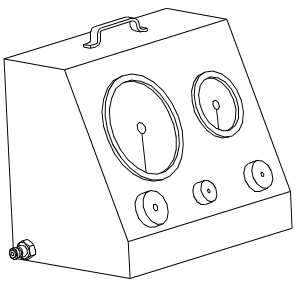

Procedure >

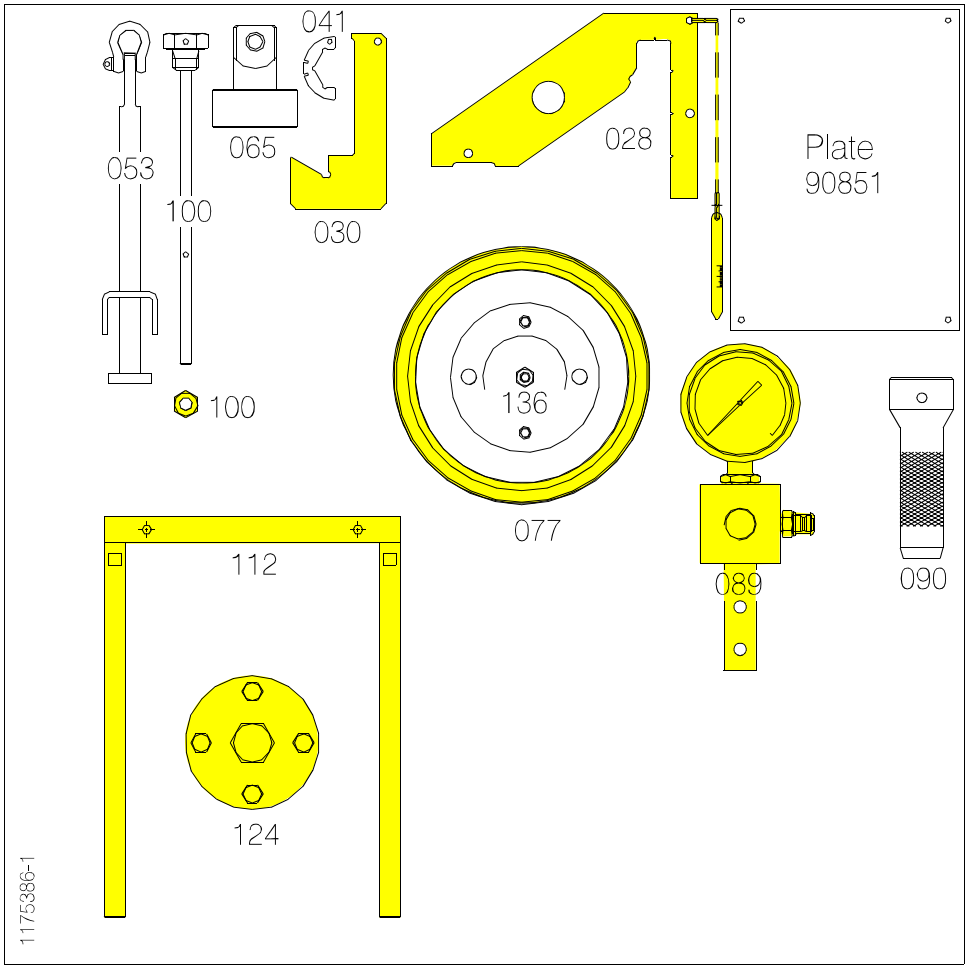

Spare Parts

Plate – Item No.	Description	Qty
90801-147 145	Locking plates	4
90801-147 312	O-ring	1
90801-147 336	O-ring	1
90801-147 361	Piston rings	2
90801-147 373	Guide ring	1
90801-147 385	Sealing ring	1
90801-147 407	O-ring	1
90801-147 444	Locking plates	2
90801-147 481	Sealing ring	1
90801-147 564	O-ring	1
90801-147 576	O-ring	1
90801-147 611	Sealing rings	2
90801-147 696	Gaskets	2
90801-147 743	O-ring	1

Procedure >