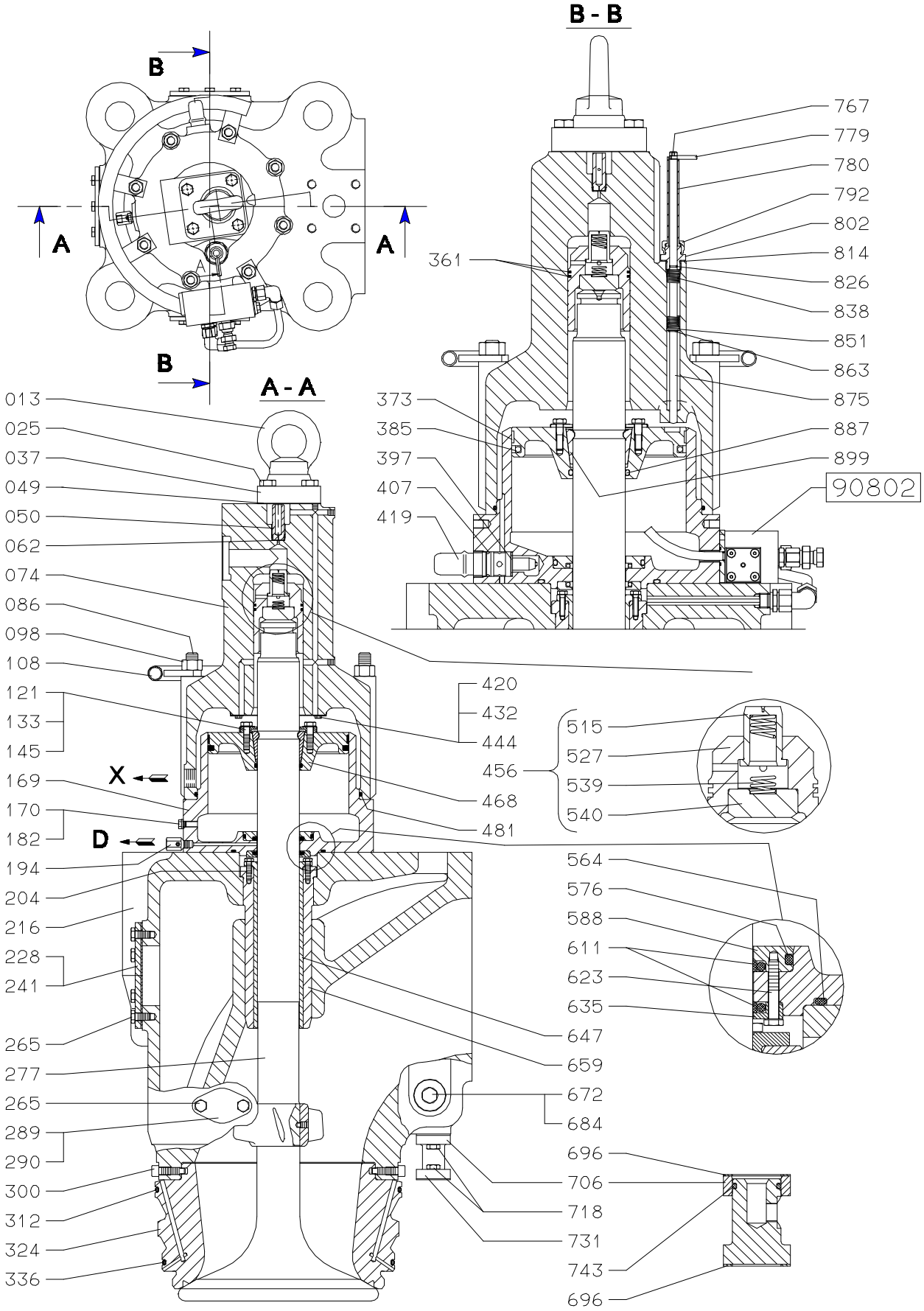
B - B
A - A
B
A
A
B
X
D
013
025
037
049
050
062
074
086
098
108
121
133
145
169
170
182
194
204
216
228
241
265
277
265
289
290
300
312
324
336
361
373
385
397
407
419
420
432
444
456
468
481
515
527
539
540
564
576
588
611
623
635
647
659
672
684
696
706
718
731
743
696
767
779
780
792
802
814
826
838
851
863
875
887
899
90802

Plate 90801-147 Exhaust Valve

Item No.	Part Description
013	Lifting eye bolt
025	Screw
037	Lifting attachment
049	Gasket
050	Orifice
062	Gasket
074	Oil cylinder
086	Stud
098	Nut
108	Safety strap
121	Disc
133	Screw
145	Lock washer
169	Air cylinder
170	Plug screw
182	Gasket
194	Ball cock
204	Screw
216	Valve housing
228	Cover
241	Gasket
265	Screw
277	Valve spindle
289	Flange
290	Gasket
300	Stop screw
312	O-ring
324	Valve seat
336	O-ring
361	Piston ring
373	Guide ring
385	Sealing ring
397	Gasket
407	O-ring
419	Safety valve
420	Disc
432	Screw
444	Lock washer
456	Piston, complete
468	Piston
481	Sealing ring
515	Damper piston
527	Piston
539	Spring
540	Disc, please state height 18 or 15 mm
564	O-ring
576	O-ring
588	Flange
611	Sealing ring
623	Screw
635	Flange
647	Liner for spindle guide
659	Spindle guide
672	Gasket
684	Plug screw
696	Gasket
706	Flange
718	Screw
731	Cooling water connection
743	O-ring
767	Cup point screw

Item No.	Part Description
779	Pin
780	Guide
792	Union nut
802	Screwed connection
814	Gasket
826	O-ring
838	Spring
851	Spring retainer
863	Spring pin
875	Rotation check rod
887	O-ring
899	Conical ring in 2/2