1. Before mounting an overhauled exhaust valve in the engine, it is recommended to check the valve as follows:

   - Lift up the valve with the engine room crane (which makes the valve open).

   - Connect compressed air to the pneumatic piston. The valve should now close.

   - Check that a 1.0 mm feeler gauge can be inserted about 15 mm into gap $\mathbf{G}_3$, to ensure that there is a clearance between the outer parts of the seating faces of valve housing and the spindle.
     See Procedure 908-2.3.

   - After shutting-off the compressed air supply and releasing the vent plug screw located just above the ball cock on the air cylinder, the exhaust valve should open.

   - After doing this a couple of times, leave the valve closed and shut-off the compressed air. The valve should remain closed for at least one hour.

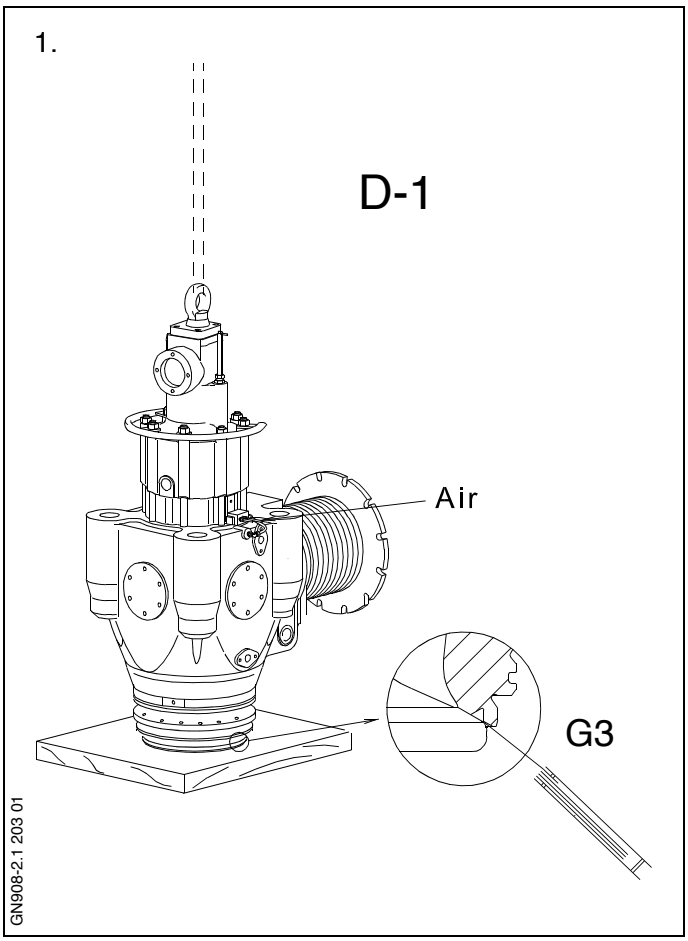

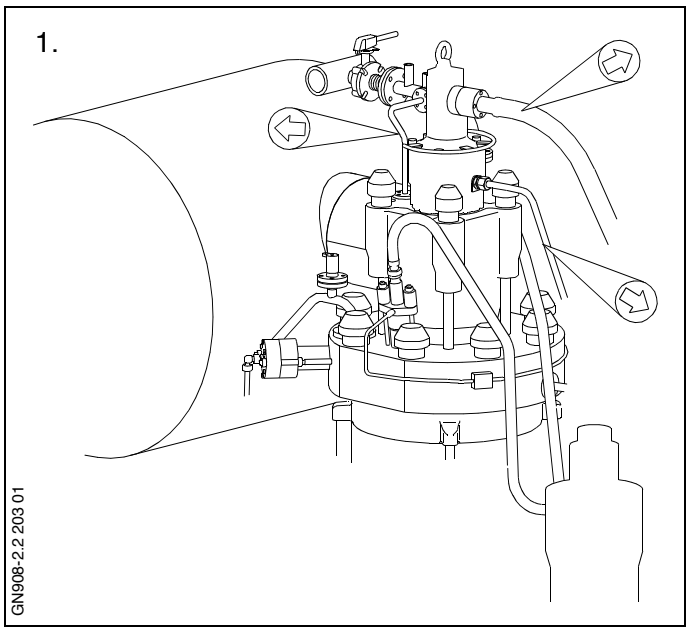

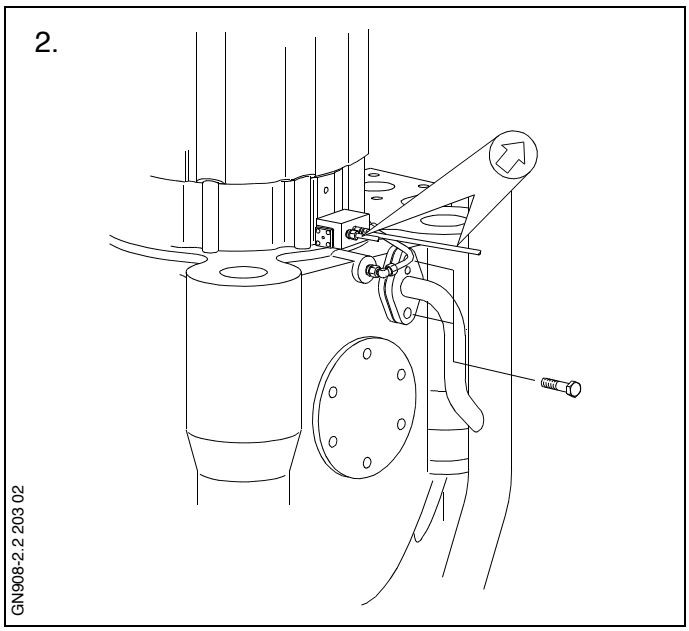

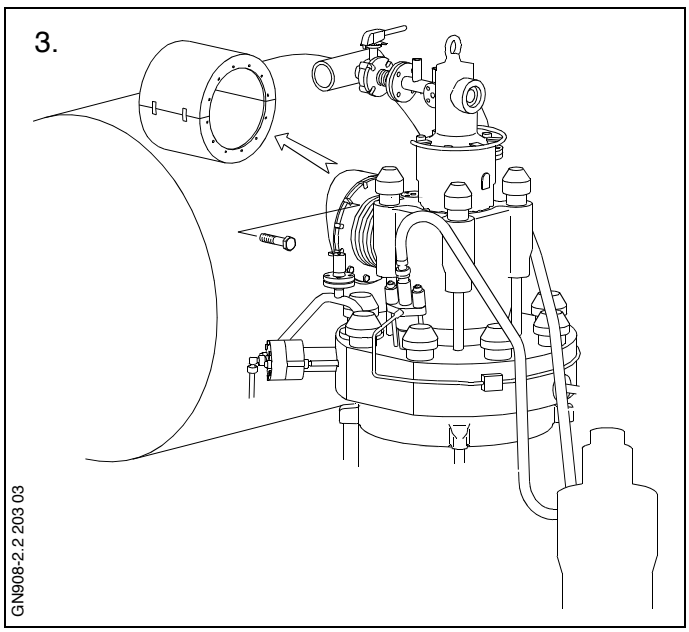

1. Close the cooling water inlet and outlet, and drain the exhaust valve.

   Dismount the high-pressure pipe for the hydraulic valve actuation.
   See Procedure 908-1.2.

   Disconnect the cooling water outlet pipe from the exhaust valve.

   Dismount the return oil pipe from the exhaust valve.

2. Dismount the air pipes for the sealing air arrangement and the pneumatic exhaust valve.

   Remove the screws of the cooling water inlet flange at the side of the exhaust valve.

3. Remove the plate jacket with insulation from the intermediate pipe and remove the screws which attach the intermediate pipe to the inlet pipe of the exhaust receiver.

Note!
The four lowermost screws need only be loosened, not removed.

4. Remove the protective caps from the exhaust valve studs, and mount the four hydraulic jacks.

   Connect the high-pressure pump to the jacks by means of the distributor block and four high-pressure hoses.

   Bleed the hydraulic system and raise the pressure as stated in Data. Then loosen and remove the nuts.
   See Procedure 913-1.

5. Attach the crane to the lifting tool fitted on top of the valve and lift away the exhaust valve.

   Carefully clean the exhaust valve bore in the cylinder cover and recondition the seating and sealing surfaces of the bore, if required.
   See Procedure 901-1.3.

   For overhaul of the exhaust valve, see Procedure 908-2.3.

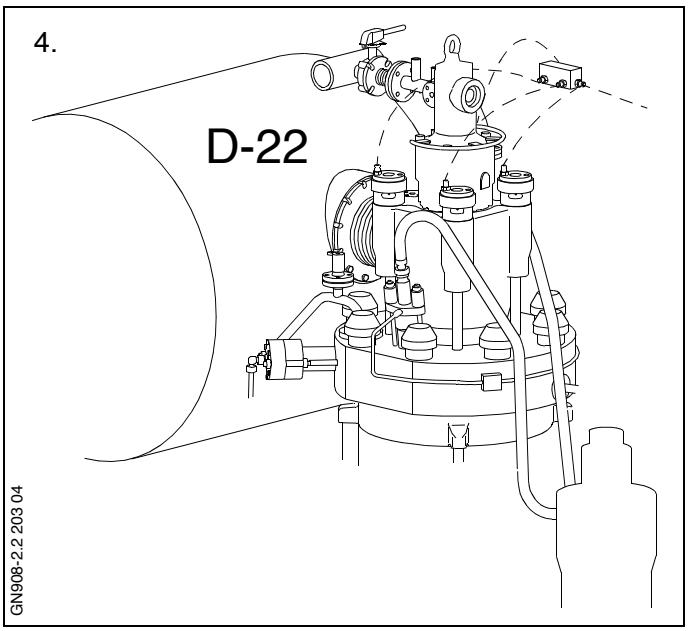

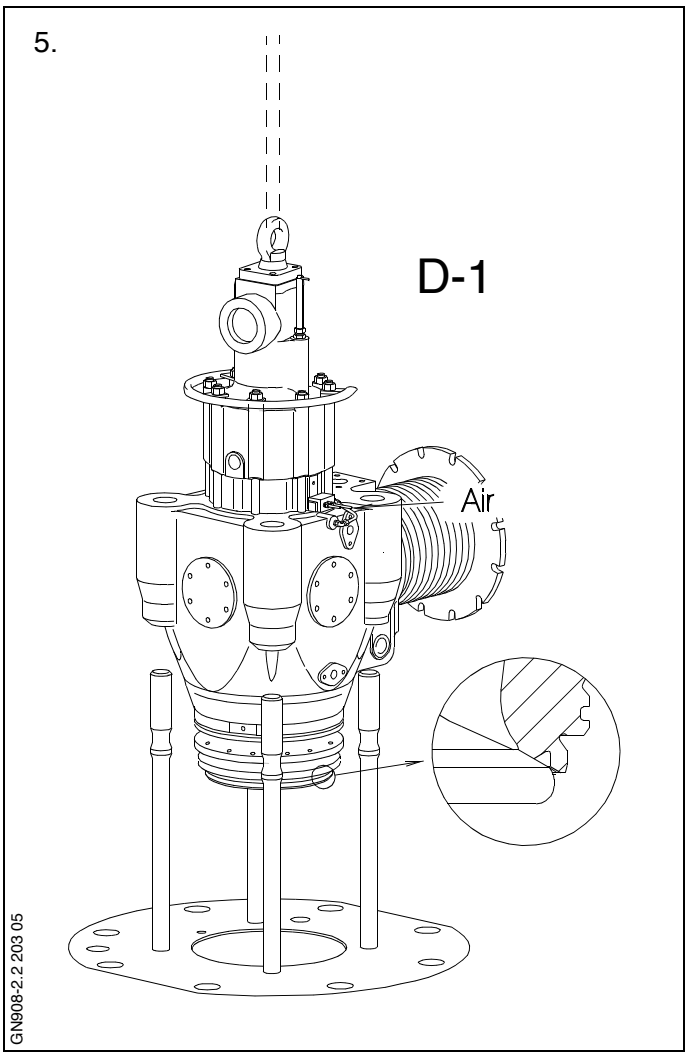

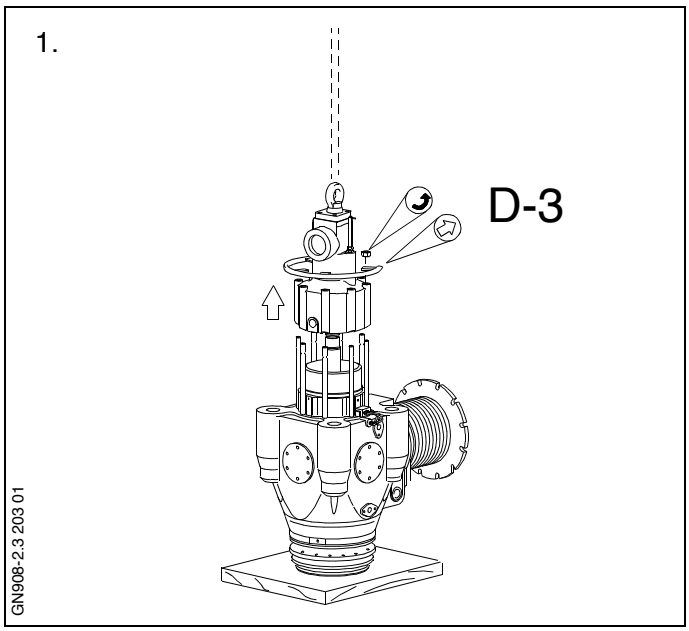

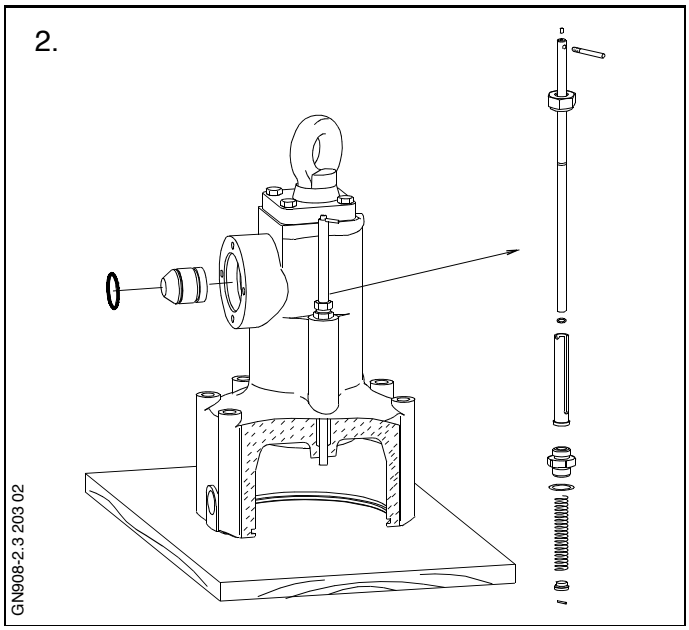

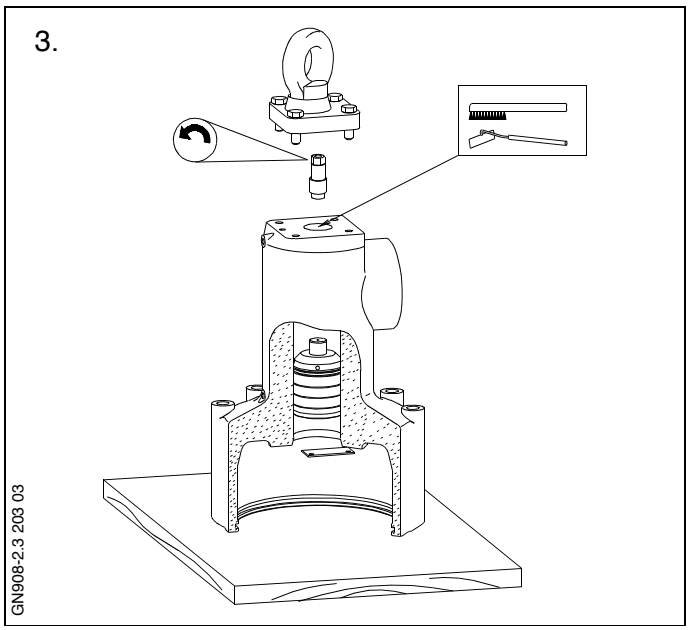

1. Place the exhaust valve on a wooden support on the platform.

   Remove the eight nuts and the safety strap from the oil cylinder.

2. Lift away and place the oil cylinder on a wooden support.

   Dismount and inspect the O-rings and the thrust piece of the hydraulic high-pressure pipe for marks.

   Replace the O-rings and thrust piece, if necessary.

   Check the functioning of the exhaust valve rotation indicator.

3. Loosen the screws and remove the lifting eye from the oil cylinder to gain access to the orifice plug.

   Unscrew and clean the orifice plug.

   Check and clean the bore for the orifice plug in the top of the oil cylinder.

4. Place the oil cylinder in a horizontal position.

   Remove and discard the sealing ring.

   Remove the flange and take out the piston.

   Inspect the bore of the oil cylinder for scoring and check its measurements.

   If the diameter of the bore exceeds the value stated in Data, send the oil cylinder to an MAN B&W authorized workshop for repair.

5. Release the vent plug screw located just above the ball cock on the air cylinder to let the air escape from below the piston.

   Remove the four screws from the flange on top of the air piston and dismount the flange.

   Loosen the air piston from the conical locking ring by means of a tin hammer, and remove the conical locking ring.

6. Pass lifting straps through the four bores of the valve housing and lift the valve housing clear of the valve spindle.

   Take care – when the internal O-ring in the air piston and the internal rings for the sealing arrangement at the bottom of the air cylinder pass the groove for the conical ring at the top of the spindle.

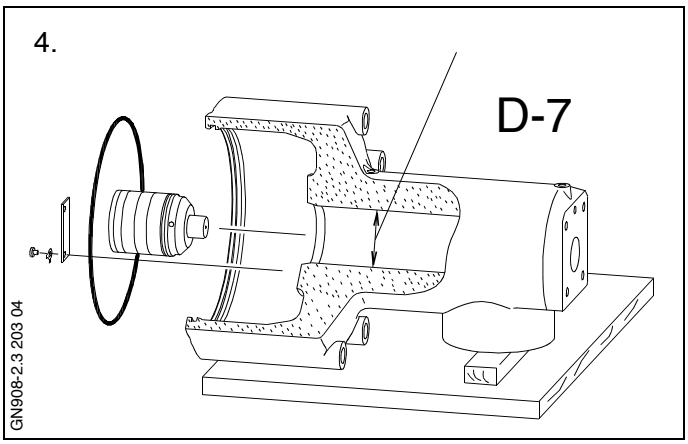

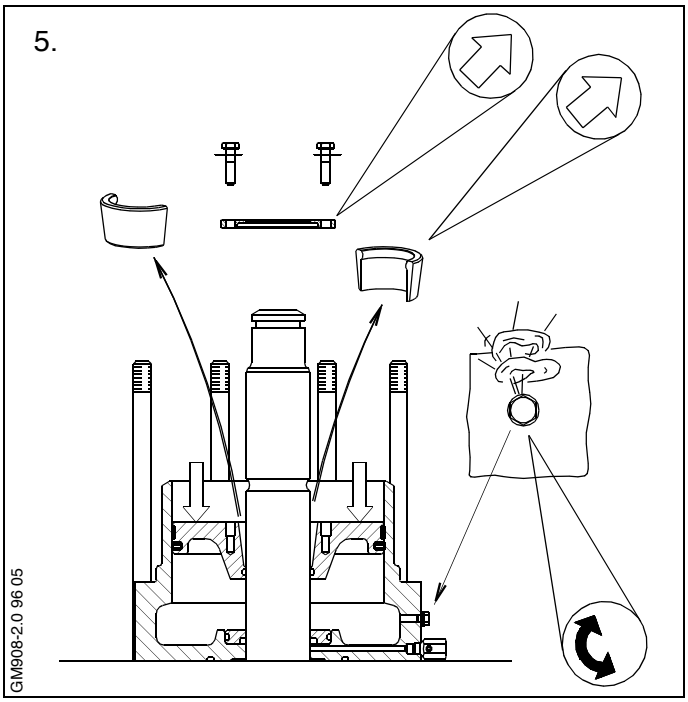

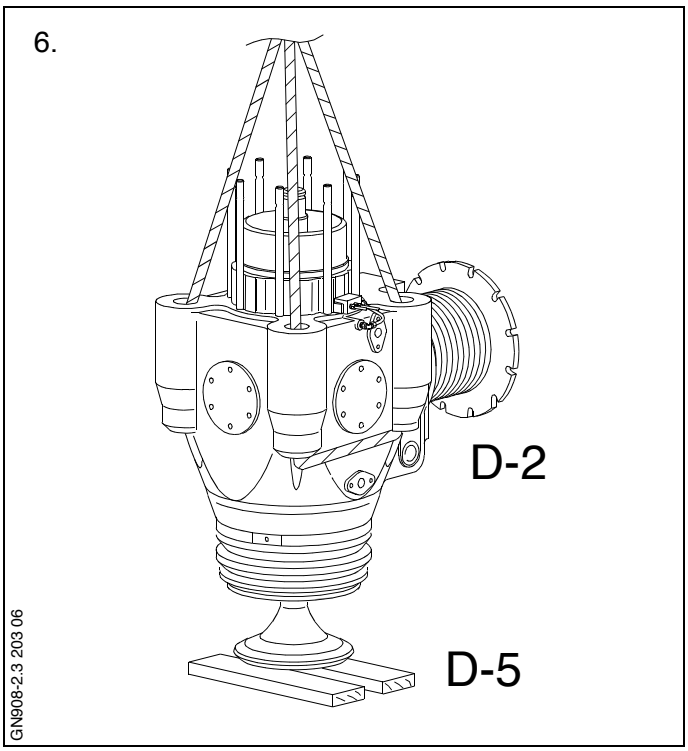

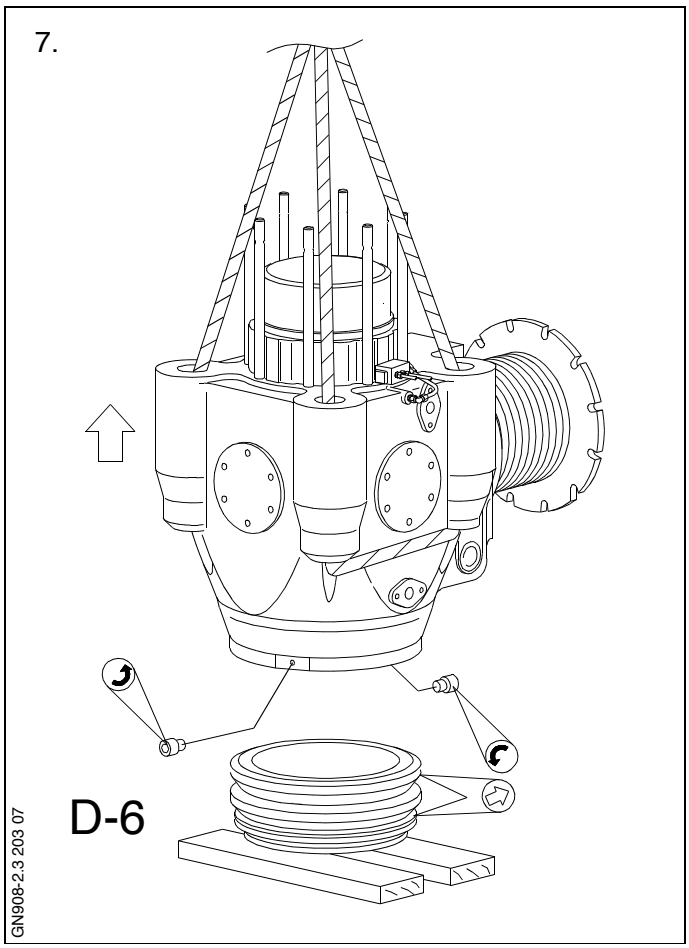

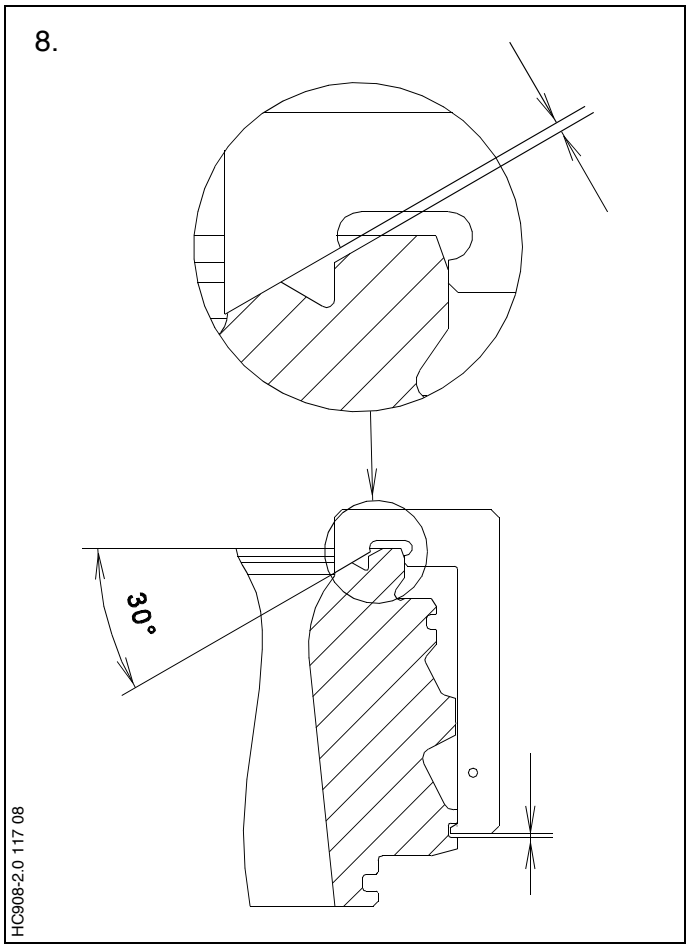

7. Poise the valve housing above a couple of planks, leaving a distance of approx. 10 mm between the bottom piece and the planks.

   Remove the lock screws which retain the bottom piece and allow the bottom piece to fall the 10 mm on to the planks. If the bottom piece has become stuck, use a tin hammer to release it.

   Remove the O-rings from the bottom piece and clean all the cooling bores.

Bottom piece:

8. Inspect the seating of the bottom piece **carefully** for damage and check with the template.

Note!
Before using the template, thoroughly clean the contact faces on the valve housing seat with a steel brush. All measurements should be taken at four diametrically opposite points on the circumference of the bottom piece seating

   Take measurements $\mathbf{G_2}$ and $\mathbf{G_3}$, using a feeler gauge. Compare the results with the figures stated in Data D-18 and D-19.

9. IF burn marks are visible on the bottom piece seating OR $\mathbf{G_3}$ does **not** equal D-19, THEN the valve housing seat must be ground.

   IF the template rests on the lower surface in the groove, i.e. $\mathbf{G_2} = 0$, THEN the bottom piece seating must **not** be ground, regardless of burn marks or $\mathbf{G_3}$.

   Contact MAN B&W Diesel for advice on reconditioning.

10. If it is necessary to grind the seating, proceed as follows:

    Before placing the bottom piece on the grinding machine, turn the grinding head away from the grinding table.

    Mount two eye screws in the bottom piece and place the bottom piece on the circular table of the grinding machine. Make sure, by means of a dial indicator, that the bottom piece is correctly centered.

Note!
For the vertical setting of the grinding head, *see Data*. The 'offset angle' on the horizontal scale is 0°.

Regarding the use of the grinding machine, see separate instructions.

After grinding, re-check the seating of the bottom piece with the template.

Use a feeler gauge and the template to measure how much has been ground away from the seating.

Grind the recess so that gap $\mathbf{G_3}$ equals D-19 as stated on the Data sheet.

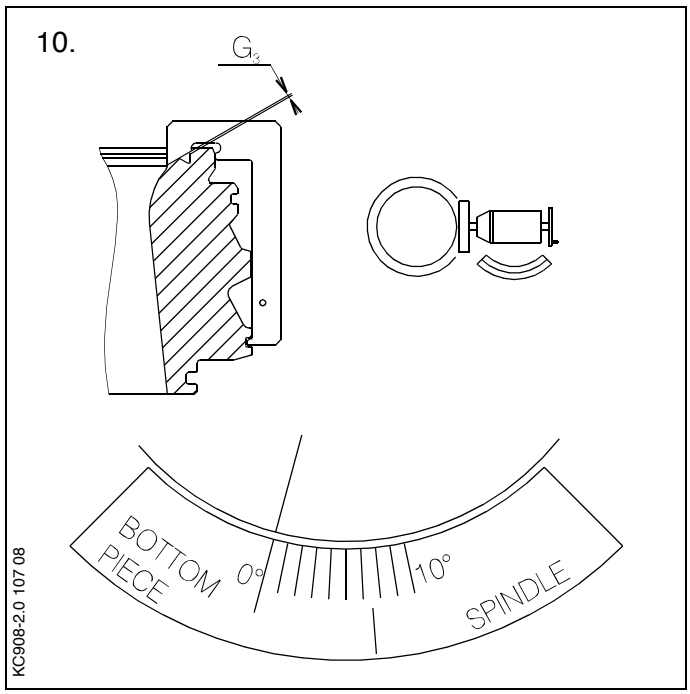

Valve spindle

11. Inspect the seating of the valve spindle for burn marks.

    Check the burn-off F1 of the valve spindle by measuring at each of the points **A, B, C, D** and **E**, indicated by means of notches in the template.

Note!
Before using the template, clean the contact faces on the valve spindle thoroughly with a steel brush**.** All measurements should be taken at four diametrically opposite points on the circumference of the valve spindle.

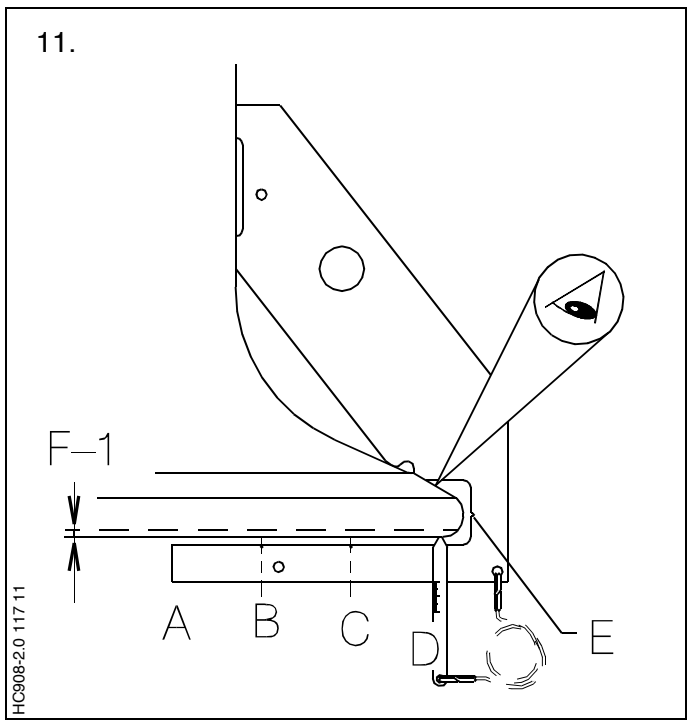

< Data

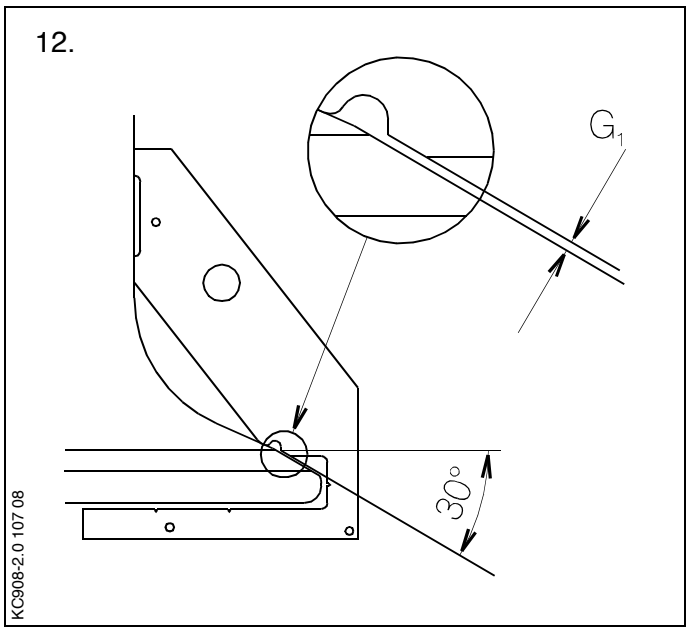

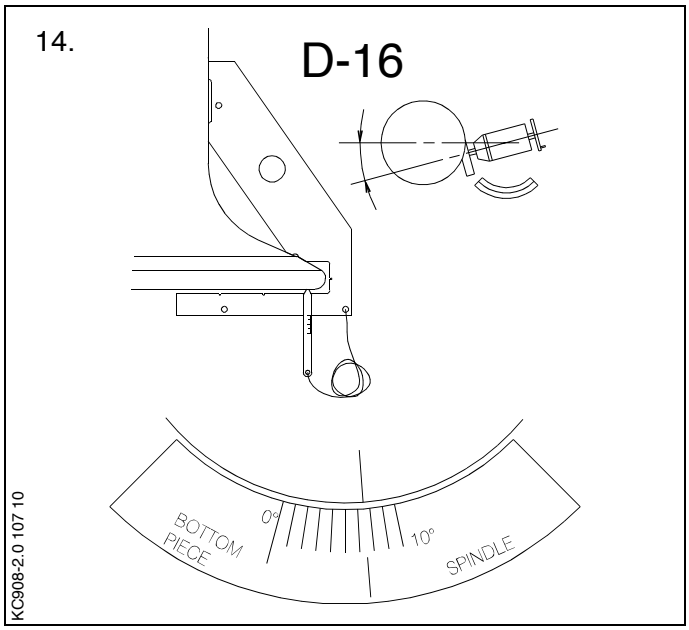

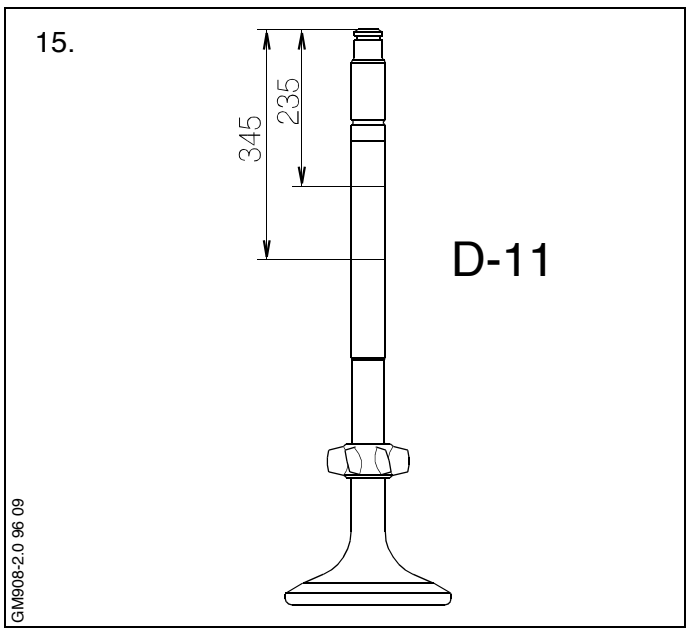

12. Measure gap $\mathbf{G_1}$ between the template and the seating of the spindle.

13. IF burn marks are visible on the seating of the spindle, the valve must be ground.

    IF gap $\mathbf{G_1}$ exceeds the max. value D-21, *see Data*, OR the burn-off $\mathbf{F_1}$ exceeds the max. burn-off D-20, the spindle must not be ground.

    Contact MAN B&W Diesel for advice on re-conditioning.

14. To grind the seating of the spindle, place the spindle in the grinding machine and tighten it whereby it will automatically be centered.

    Check the alignment with a dial gauge.

Note!
For the vertical setting of the grinding head and the offset angle on the horizontal scale, *see Data*.

Regarding the use of the grinding machine, see separate instructions.

During grinding, measure the gap $\mathbf{G_1}$ frequently. The max. grinding of the spindle, *see Data,* must **not** be exceeded.

If the max. grinding is reached and burn marks are still visible on the seating of the spindle, contact MAN B&W Diesel for advice on reconditioning.

15. Check the spindle stem for wear in the area between 235 mm and 345 mm measured from the top of the spindle.

    If the stem diameter is less than stated in Data, or the hard facing layer is worn away, contact MAN B&W Diesel for advice.

16. Dismount the air piston from the air cylinder, and check the teflon guide ring and teflon sealing ring for wear.

    Dismount the sealing air control box from the air cylinder/valve housing.

    Mount two eye screws in the air cylinder and dismount the air cylinder.

17. Clean the air cylinder and check the running surface for wear or possible scores.

    Remove the four screws in the bottom of the air cylinder.

    Dismount and check the flanges and the sealing rings of the sealing air arrangement.

    Fit new O-rings and sealing rings when mounting the flanges in the bottom of the air cylinder.

    Make sure to mount the sealing rings correctly, see the sketch.

    Tighten the four screws.

18. Replace the sealing ring in the groove at the very bottom of the air cylinder.

    Remove the protective cap from the safety valve, dismount the valve from the air cylinder, and replace the gasket and sealing ring.

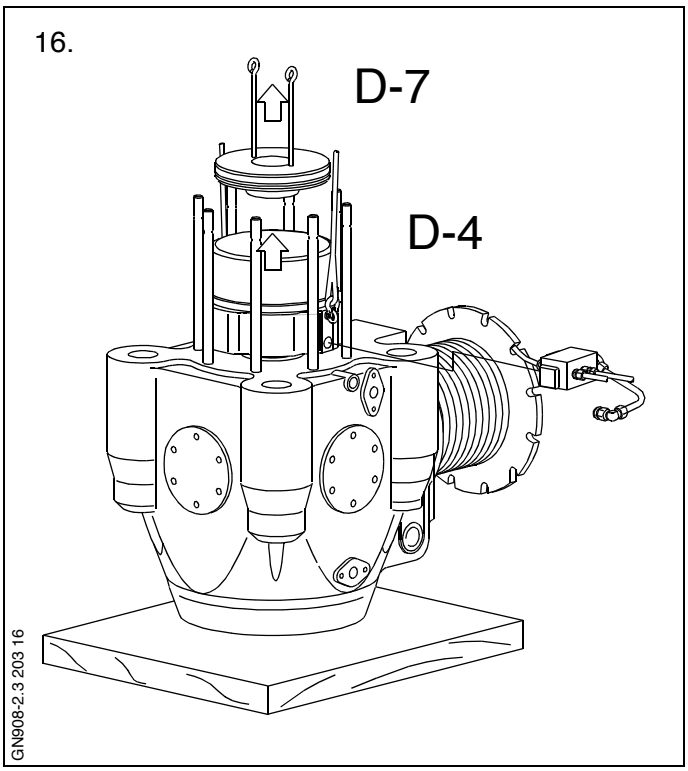

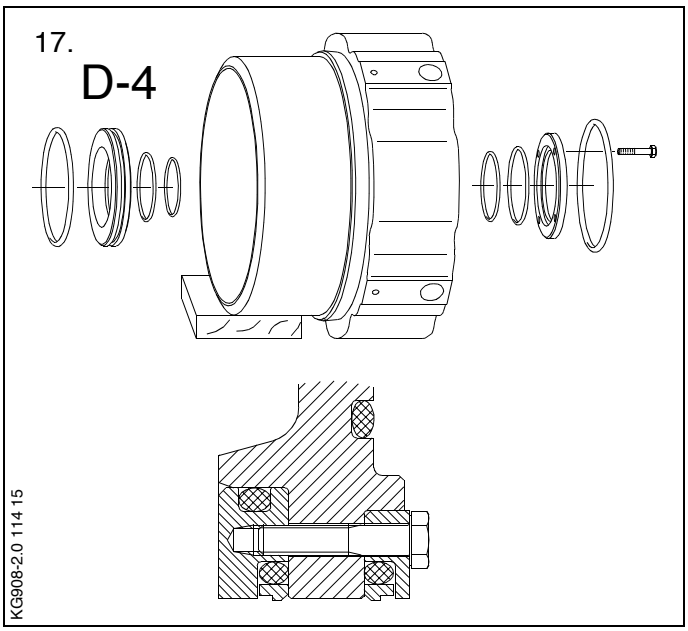

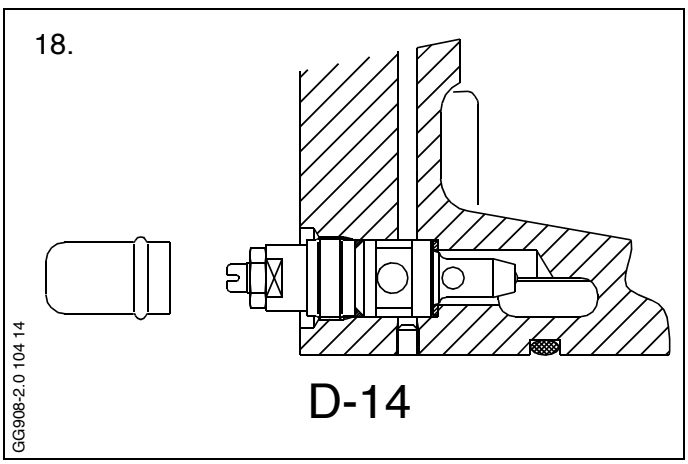

< Data

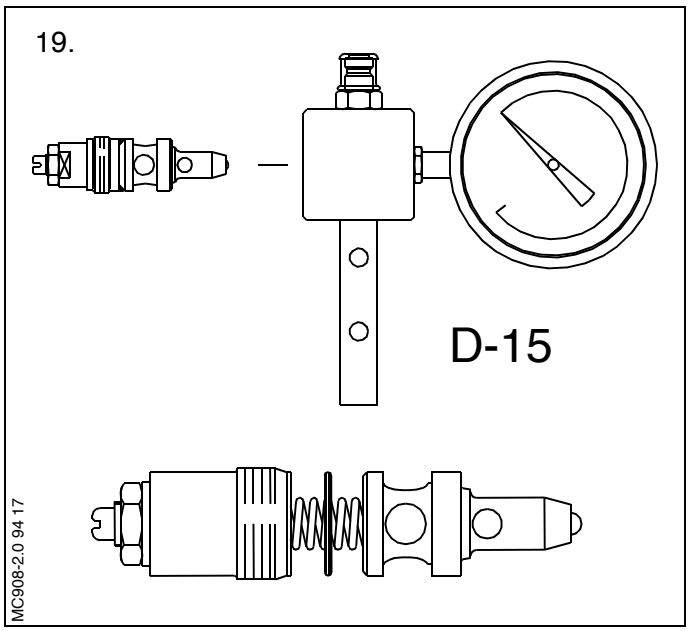

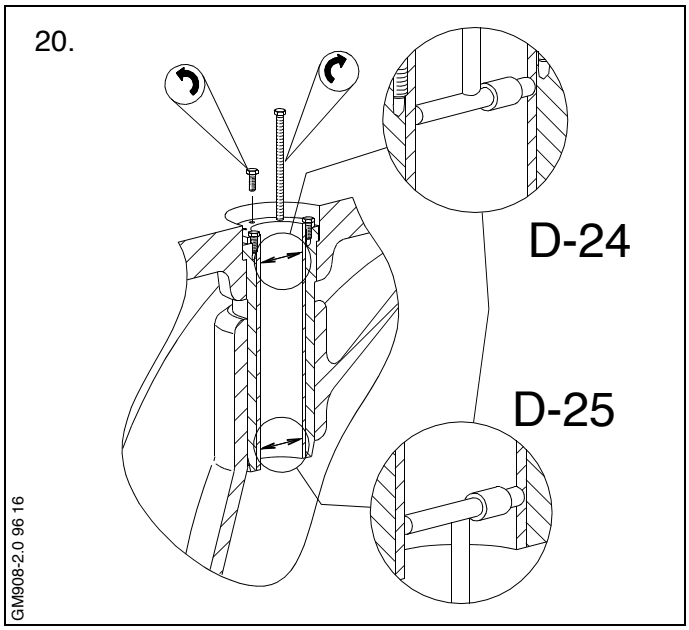

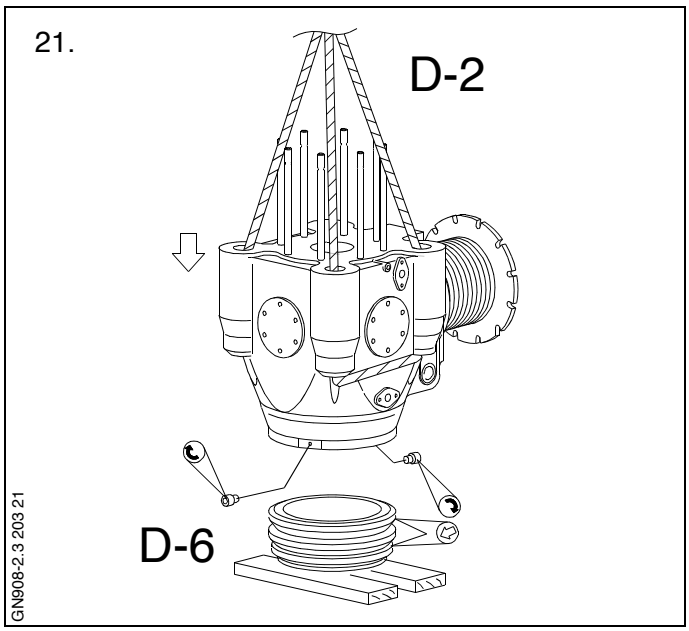

19. Place the valve in the pressure testing device.

    Connect the testing device with the high-pressure pump by means of a hose.

    Check the opening pressure, *see Data*.

    If the opening pressure is not correct, loosen the lock nut and, using a screwdriver, adjust the safety valve until the correct pressure is indicated.

    Tighten the lock nut and test the opening pressure once more.

    When mounting the safety valve in the air cylinder, use only the machined faces on the valve housing and tighten, *see Data.*

    Finally, mount the protective cap.

20. Inspect the bushing in the spindle guide for wear. *See Data.*

    If it proves necessary to replace the bushing, pull it clear by means of four dismantling screws.

21. Mount the bottom piece (with new O-rings) on the valve housing and secure with the screws.

    Mount the valve spindle in the valve housing.

22. After overhauling and remounting the valve spindle and bottom piece in/on the valve housing, guide the air cylinder with the sealing air arrangement down over the valve spindle.

Caution!
To avoid damage, take great care when the internal rings (well-coated with ordinary lube oil) pass the groove for the conical locking ring.

23. Remove the filter plug screw from the sealing air control unit.

    Clean and check the filter plug screw, and replace the O-ring.

    After checking, re-mount the filter plug screw.

    Loosen and remove the screws and cover the sealing air valve spindle in the control unit.

    Remove the valve spindle and check the sealing rings and the spring. If necessary, replace them.

    After checking, mount the valve spindle and spring, and tighten the cover.

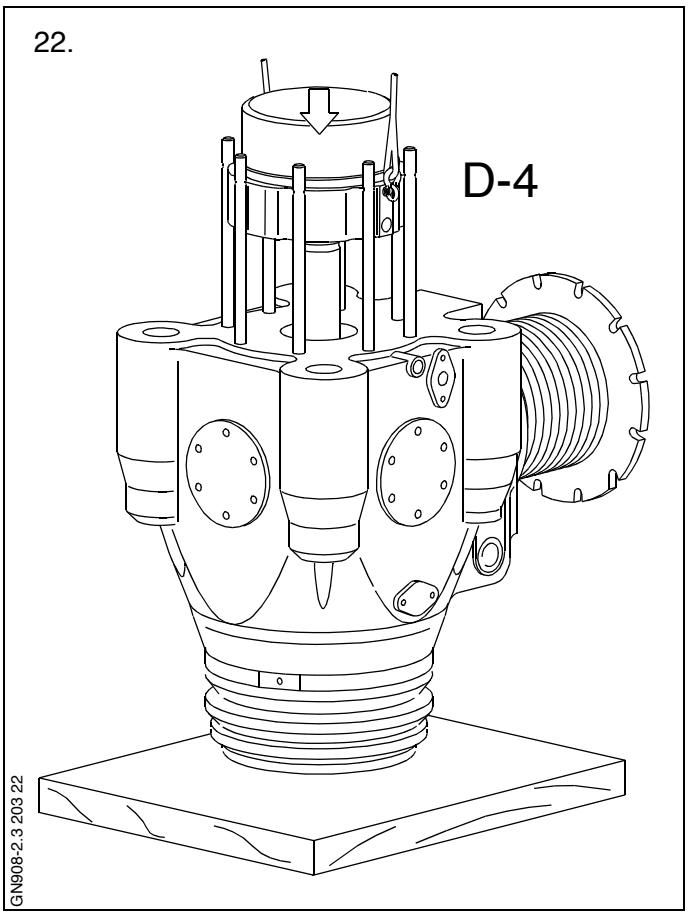

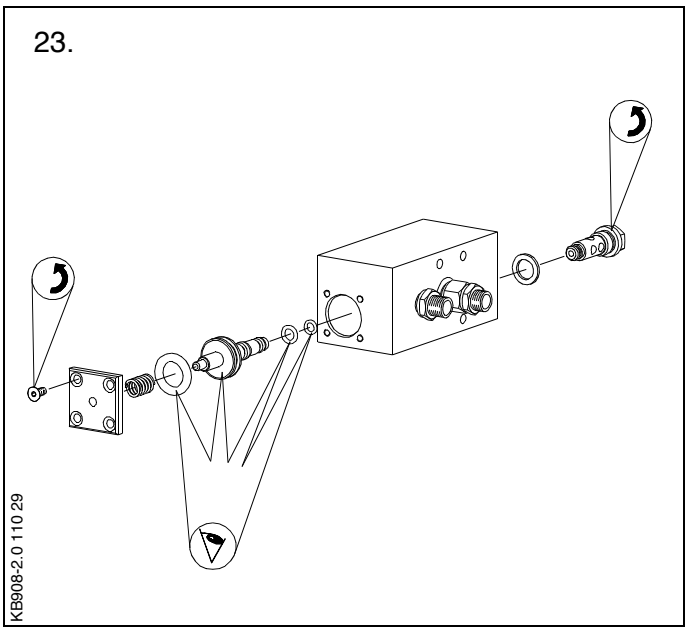

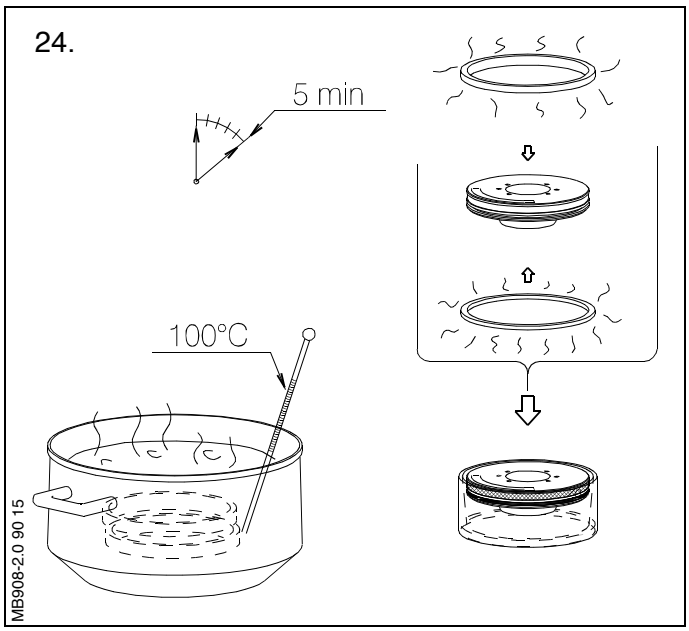

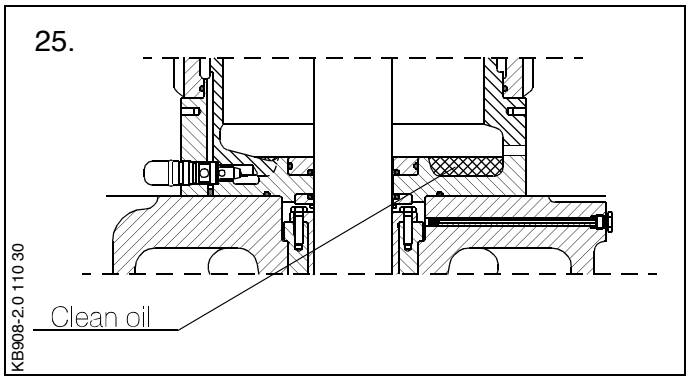

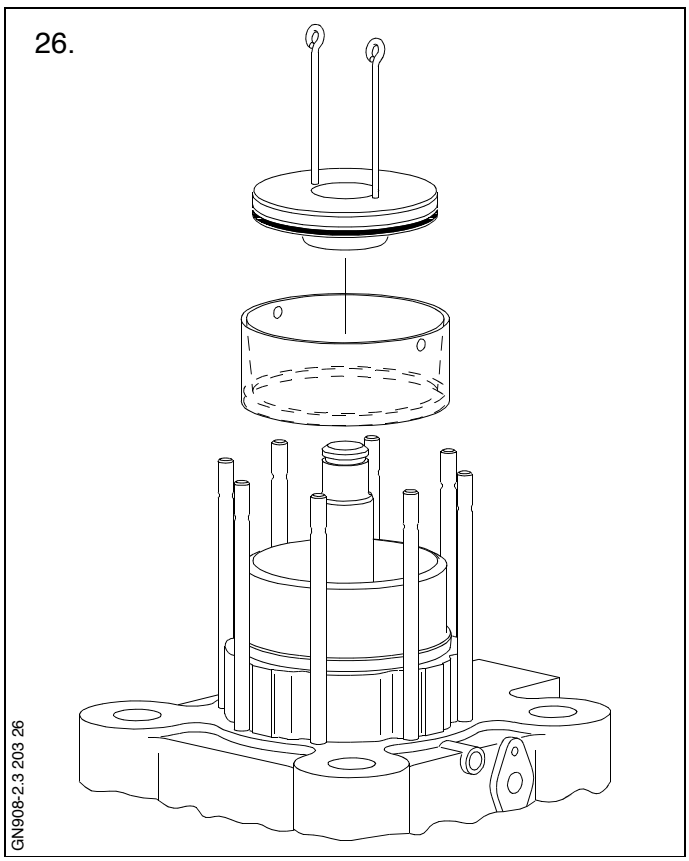

24. If it is necessary to replace the rings, cut them and remove them.

Be careful not to damage the edges of the ring grooves in the piston.

Mount the new O-ring in the groove of the air piston.

Caution!
Before mounting, heat the new teflon rings in 100°C hot water for at least five minutes. When mounting the teflon rings, **be careful** not to damage the running surfaces.

After mounting, compress the teflon rings by means of the conical ring. This is done by pressing the air piston through the conical ring.

25. Fill the sealing air chamber and the lower part of the air cylinder with clean lubricating oil.

26. Fit the conical guide ring for the air piston on the air cylinder.

Lower the air piston over the valve spindle down into the air cylinder.

Caution!
To avoid damage, take great care when the internal sealing ring in the air piston passes the groove for the conical locking ring.

Remove the conical guide ring from the air cylinder and the eye screws from the air piston.

27. Mount the conical locking ring and lift the air piston up around the locking ring.

    Remove the eye screws.

    Mount the flange on top of the air piston and, by means of the four screws, tighten the air piston and the flange together.

28. Remove the piston rings from the oil piston and check them for wear.

    If the thickness of the rings has worn down to the minimum, *see Data*, discard the rings and mount new ones.

    Check that the **TOP** mark on the piston rings faces upwards, when mounting.

29. Mount the piston on top of the spindle and check the functioning of the damper piston.

    Connect compressed air supply to the space below the air piston, so as to keep the valve closed, and to keep the air cylinder in close contact with the valve housing.

    Place the measuring tool on the air cylinder across the piston.

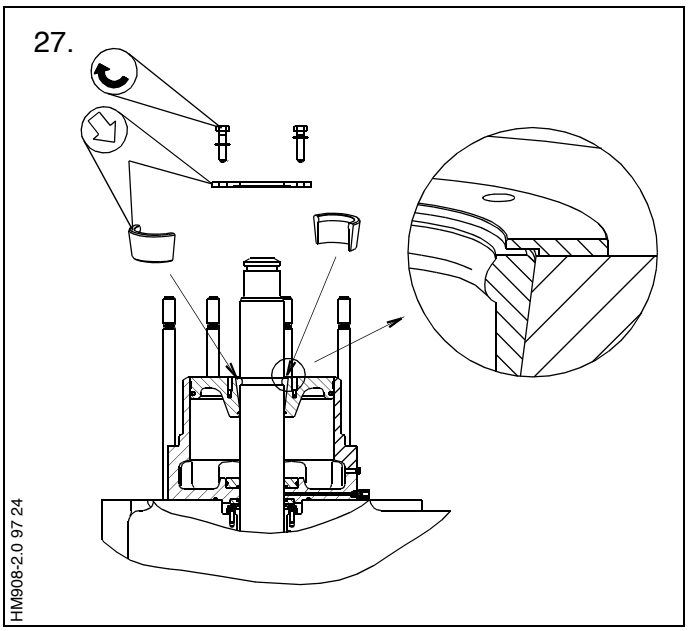

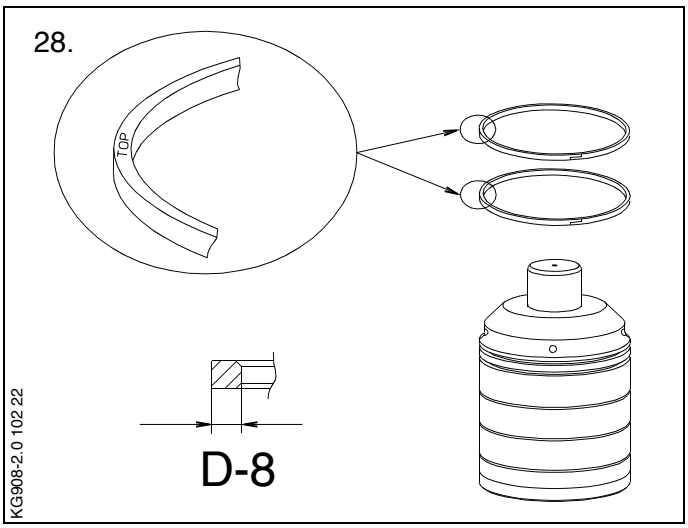

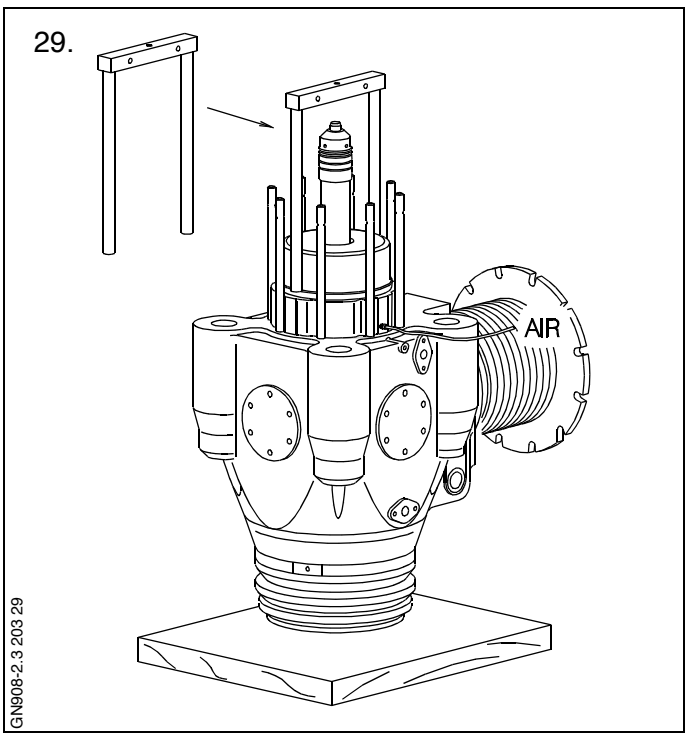

< Data

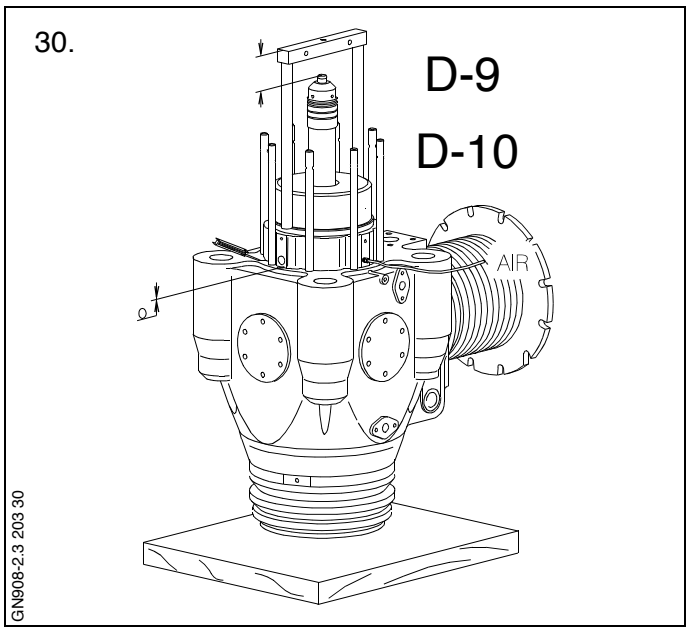

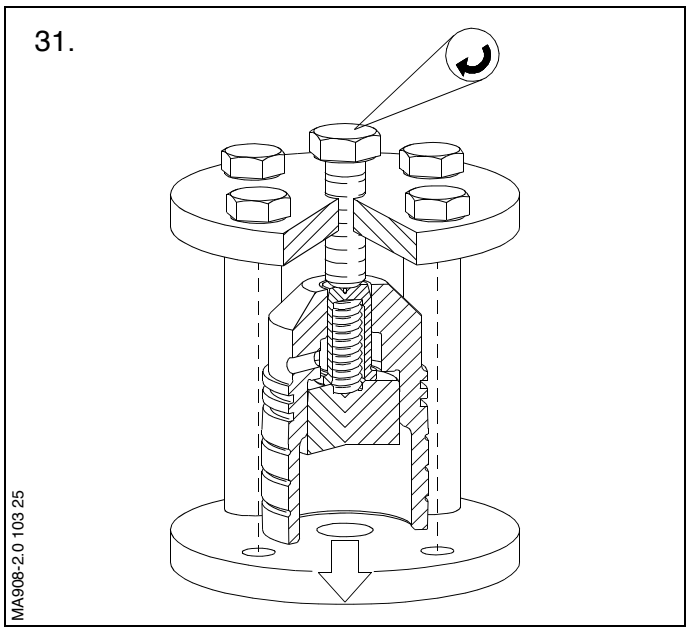

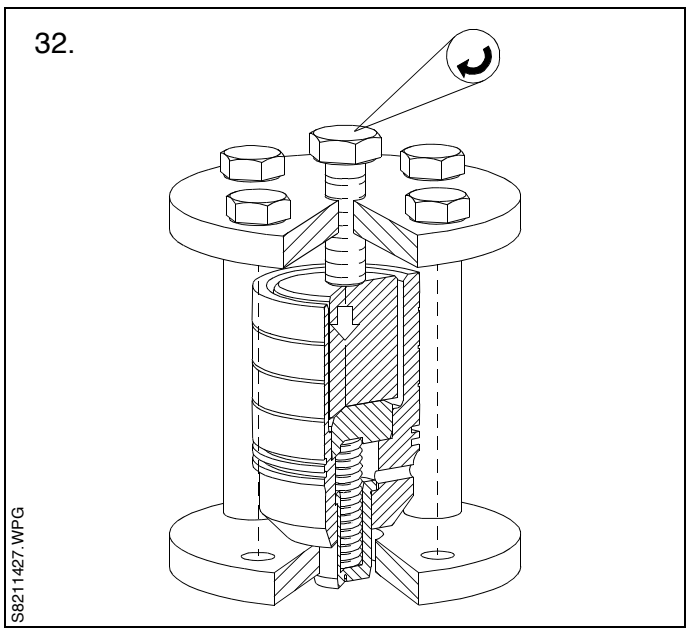

30. Check the mesh of the damper piston by checking the distance from the upper edge of the crossbar to the top of the damper piston. *See Data*.

    If the measurement is outside the value stated in Data, adjustment must take place by changing the disc in the damper piston as follows:

31. Place the piston in the special tool.

    Press out the disc with the centre screw.

    If necessary, change also the spring and the piston.

32. Assemble the damper piston with the new disc in the special tool.

    Place the piston upside down in the tool and press the disc into place in the piston.

    Check the mesh once more, repeating points 22 and 23.

< Data

33. After carefully cleaning and visually checking all the parts, assemble the parts and mount the piston, orifice plug and lifting eye in the oil cylinder. *See Data.*

34. Mount a new sealing ring in the inner groove of the oil cylinder.

    Mount the overhauled oil cylinder on top of the air cylinder.

    Mount the safety strap and tighten the nuts. *See Data.*

    Disconnect the compressed air.

35. Blow through the orifice pipe in the exhaust valve housing with compressed air to remove any obstructions. Also blow through the pipes of the sealing air control unit.

    Mount the sealing air control unit on the air cylinder.

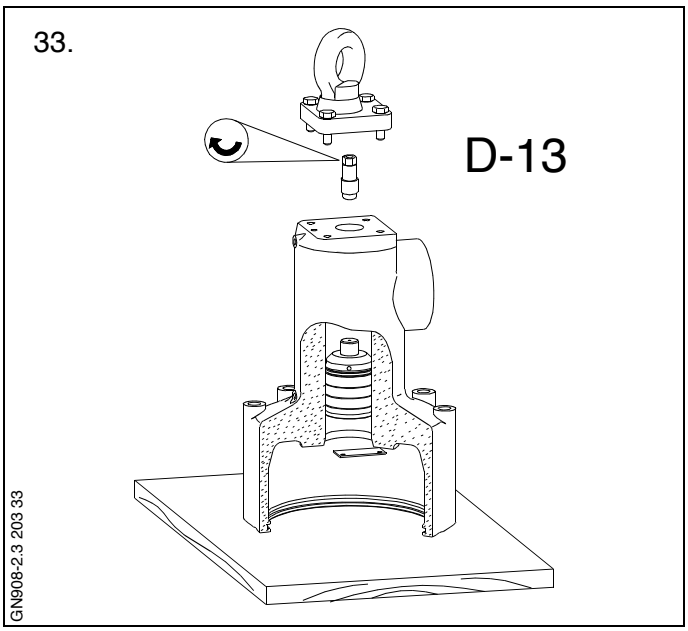

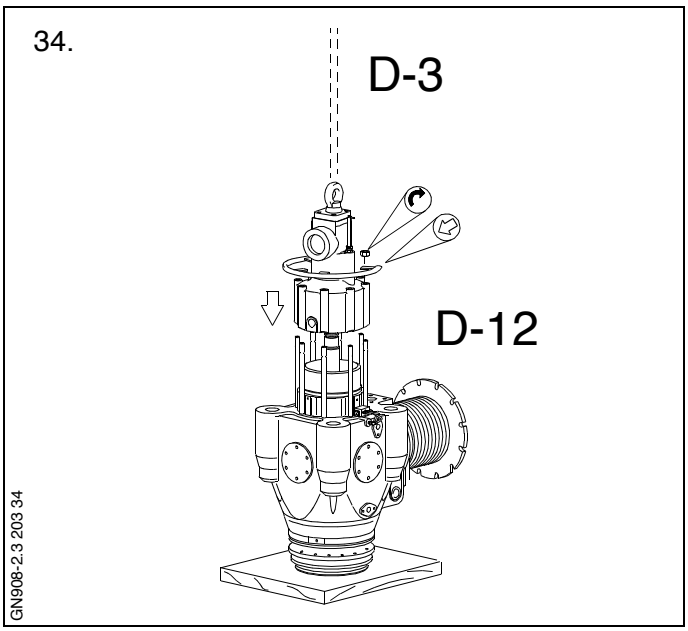

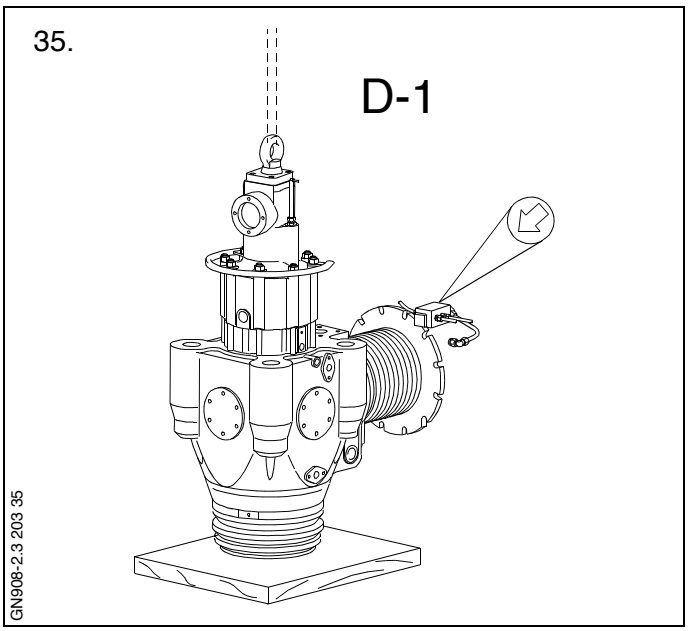

< Data

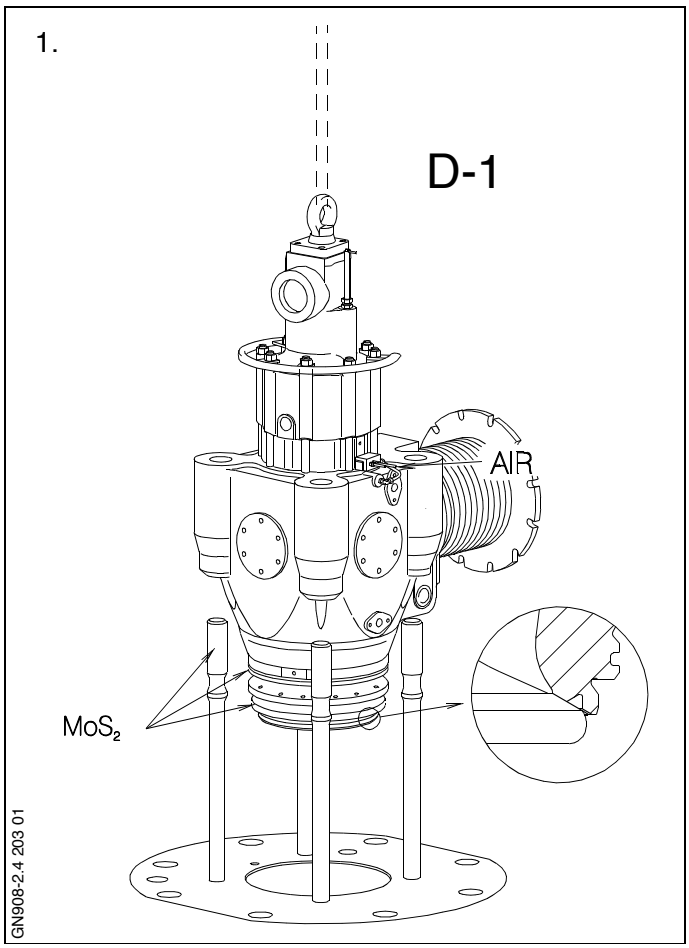

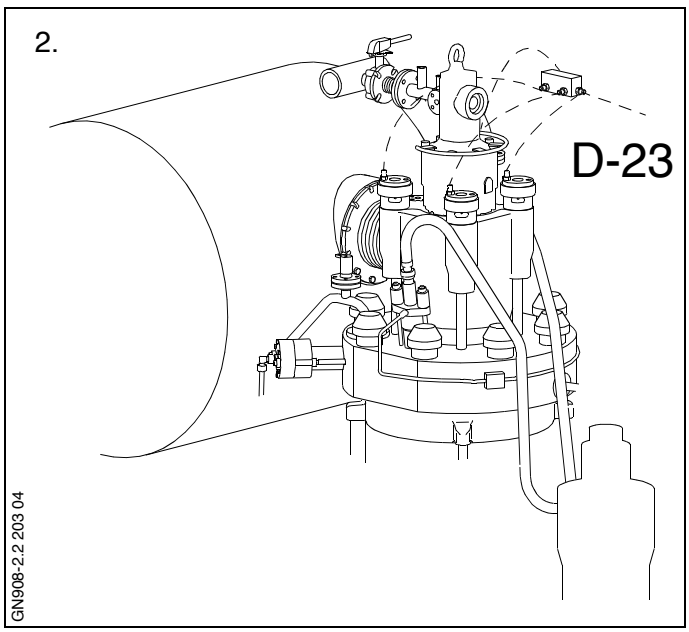

1. After fitting new O-rings on the seat and the water connection, lift the overhauled exhaust valve.

   Lubricate the O-rings and the threads of the studs with molybdenum disulphide (MoS_2).

   Position the valve in the cylinder cover bore, guiding it in accordance with the exhaust flanges and the water connection.

Note!
Before mounting the valve on the engine, connect compressed air to the pneumatic piston to keep the exhaust valve closed during the mounting.

2. Mount the nuts and the hydraulic jacks. Raise the pressure to the value indicated in Data and tighten up the nuts.

   Relieve the system of pressure, remove the hydraulic jacks and the high-pressure hose, and fit the protective caps.

3. Connect the intermediate pipe to the flange at the exhaust receiver.

   Attach the insulation jacket.

4. Mount the cooling water inlet and outlet pipes on the exhaust valve.

   Mount the high-pressure pipe, the return oil pipe, the sealing air arrangement and the air pipe for the pneumatic exhaust valve.

   Open the lub. oil supply and the cooling water supply to the exhaust valve.

   Disconnect the compressed air and connect the normal air supply.
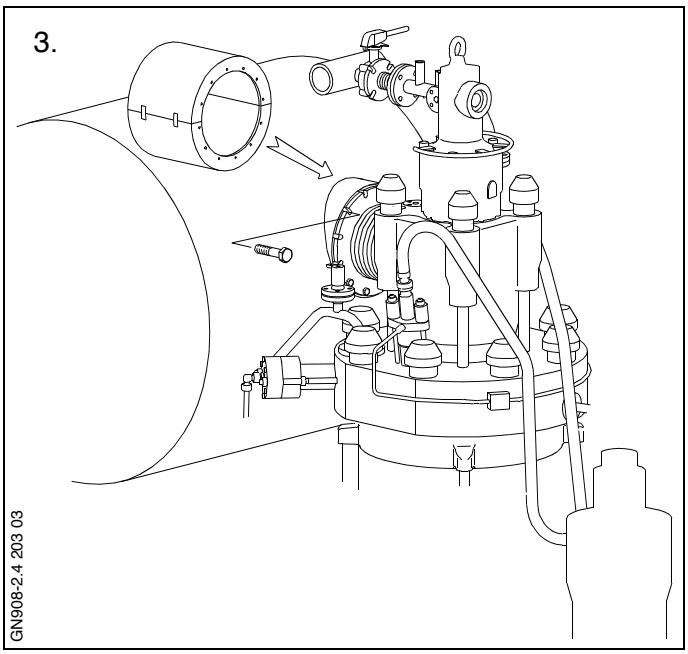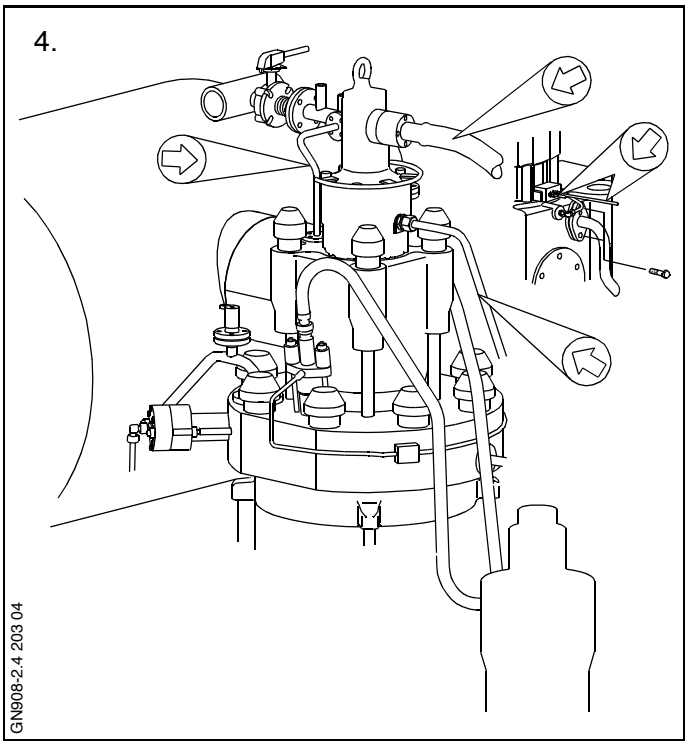
Caution!
The air supply to the exhaust valve must always be connected **before** starting the camshaft oil pumps. This is **very** important, because otherwise the valve will open more than normal**.**