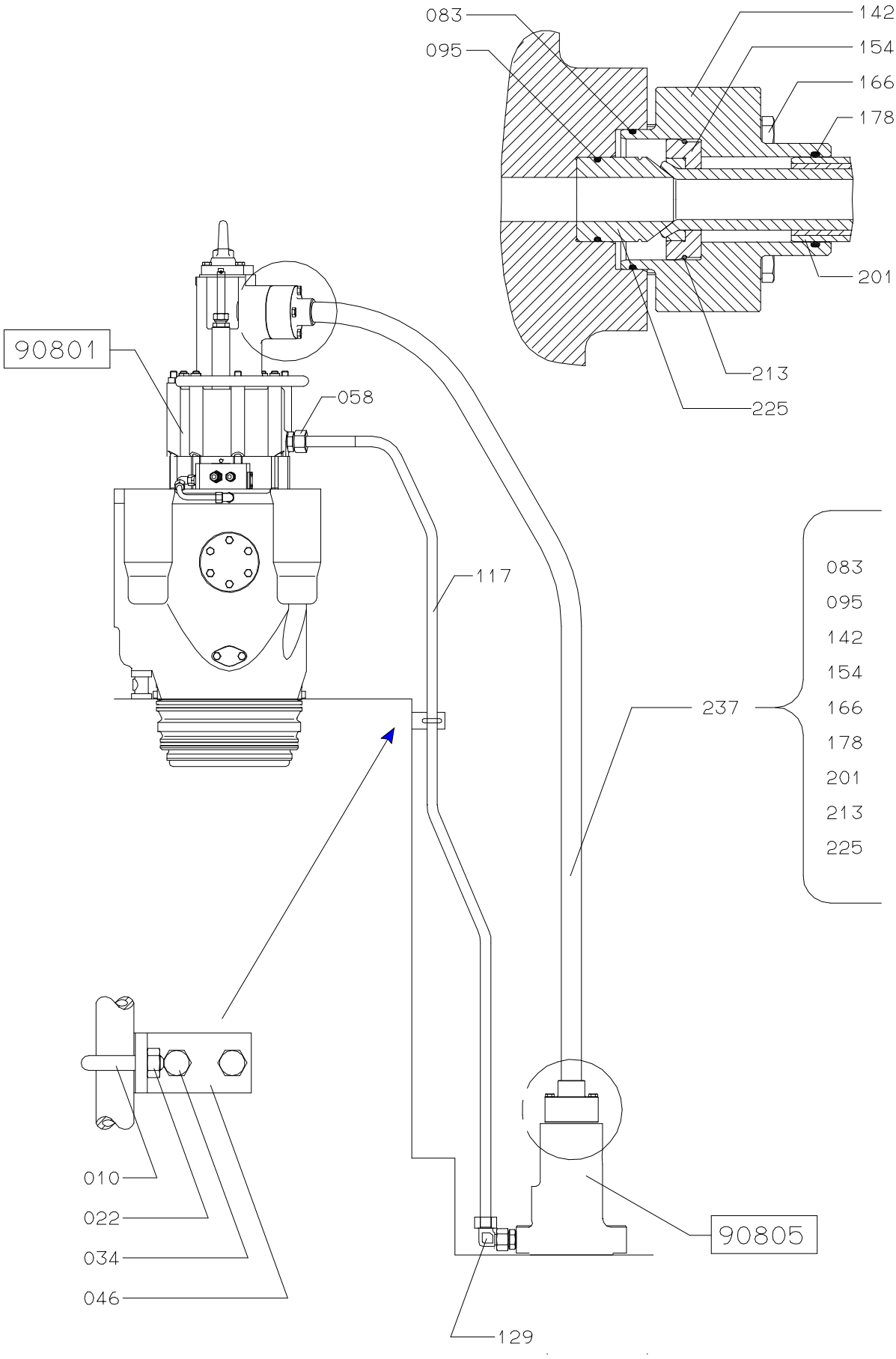
083
095
142
154
166
178
201
213
225
90801
058
117
237
083
095
142
154
166
178
201
213
225
010
022
034
046
90805
129

**Plate 90806-58 Valve Gear - Details**

| Item No. | Part Description |
|---|---|
| 010 | Clamp |
| 022 | Nut |
| 034 | Screw |
| 046 | Support |
| 058 | Coupling |
| 083 | Sealing ring |
| 095 | Sealing ring |
| 117 | Pipe, L=2160 |
| 129 | Coupling |
| 142 | Thrust flange |
| 154 | Sleeve in 2/2 |
| 166 | Screw |
| 178 | O-ring |
| 201 | High-pressure pipe |
| 213 | Spring ring |
| 225 | Intermediate piece |
| 237 | High-pressure pipe, complete |

| Item No. | Part Description |
|---|---|
| | |